HEALDSBURG PUBLIC WORKS STANDARDS
Index of Standard Details

	STANDARD #	TITLE
STREETS	ST01	Public Utilities (typical location)
	ST02	Street (typical cross section)
	ST03	Curb, Gutter and Sidewalk
	ST04	Driveway Approach
	ST05	Driveway Approach (high speed)
	ST06	Curb Ramp (type “A”)
	ST07	Curb Ramp (type “B”)
	ST08	Trench (backfill and resurfacing)
	ST09	Survey Monument
	ST10	Street Sign (typical location)
	ST11	Street Sign (post and sleeve installation)
	ST12	Street Sign (street name)
	ST13	Street Sign (advance street name)
	ST14	Street Sign (mast arm mounted)
	ST15	Street Barricade
	ST16	Sidewalk Obstruction
	ST17	Bollard
STORM DRAIN	SD01	Curb Inlet
	SD02	Storm Drain Manhole
	SD03	Ditches (concrete lined)
	SD04	Storm Drain Outfall
	SD05	Field Drain (redundant inlets)
	SD06	Sidewalk Drain
SEWER	SS01	Sewer Lateral
	SS02	Sewer Manhole
	SS03	Temporary Mainline Cleanout
WATER	WL01	Water Service (1" meter)
	WL02	Water Service (1½” and 2” meters)
	WL03	Water Service (4”, 6" and 8" meters)
	WL04	Water Service (manifold multiple meters off 2” service)
	WL05	Backflow Assembly (reduced pressure)
	WL06	Backflow Assembly (fire service double detector check)
	WL07	Valve
	WL08	Thrust Blocking
	WL09	Water Main Crossing (over a structure)
	WL10	Water Main Crossing (under a structure)
	WL11	Fire Hydrant
	WL12	Blow Off
	WL13	Air Release Valve
	WL14	Water Sample Station
	WL15	*** standard discontinued ***
	WL16	Cathodic Protection (metallic fittings)
	WL17	Cathodic Protection (metallic mains)
	WL18	Cathodic Protection (typical anode installation)
	WL19	Cathodic Protection (cable to pipe connection)
MISCELLANEOUS	MS01	Street Tree (planting)
	MS02	Street Tree (streetscape)

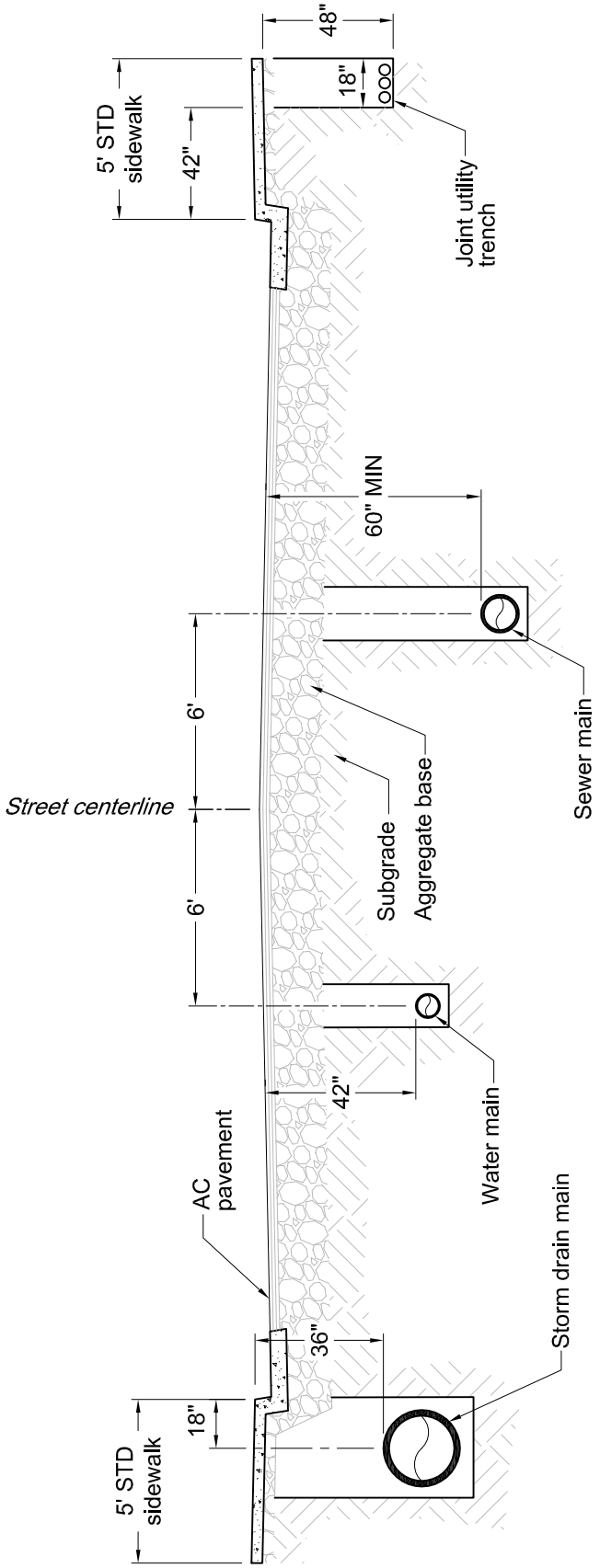

NOTES:

1. Minimum separation between crossing utilities (sewer, water, storm drain & joint utility trench) shall be 6" except, 12" separation shall be maintained where RCP storm drain mains cross over water or sewer mains.

CITY OF HEALDSBURG
CALIFORNIA SINCE 1867

PUBLIC UTILITIES

Typical Location

SCALE:	APPROVED:	DATE:
NONE		8/2008

STANDARD DETAIL

ST01

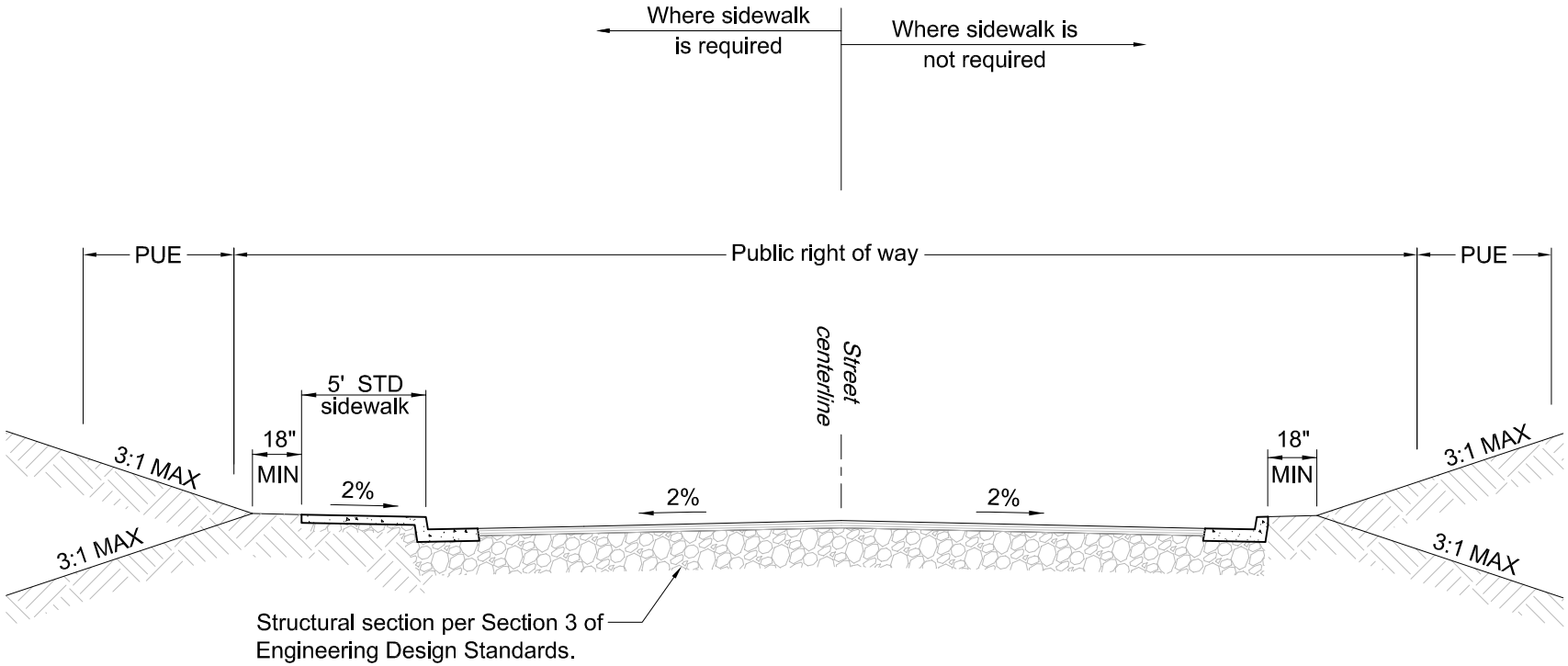

NOTES

1. Street, public right of way and public utility easement (PUE) widths shall be as specified in the general plan, specific plan or approved tentative map.

CITY OF HEALDSBURG
CALIFORNIA
SINCE 1867

SCALE: NONE

APPROVED:

DATE: 8/2008

STREET
Typical Cross Section

STANDARD DETAIL

ST02

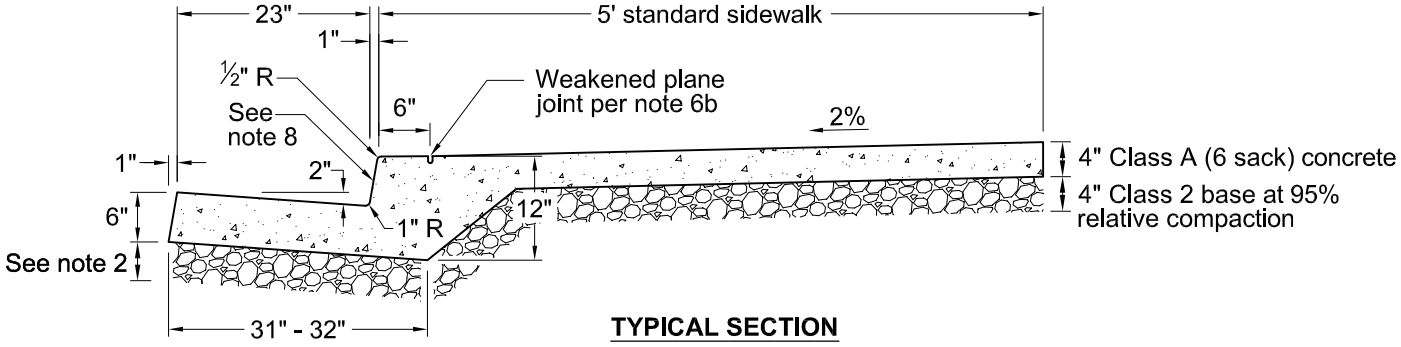

TYPICAL SECTION

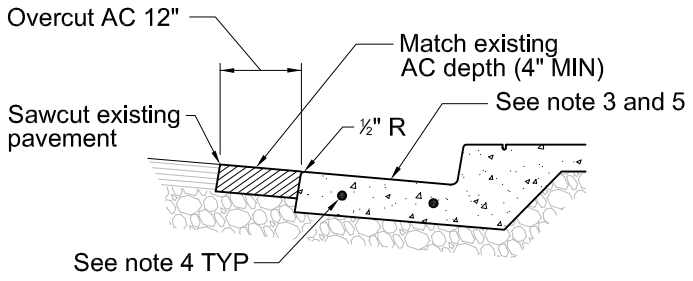

REPLACEMENT - OVERCUT AC

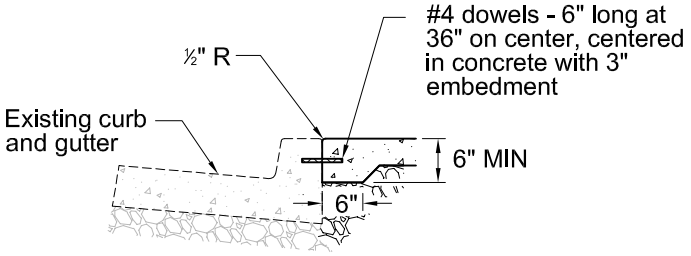

STAGED CONSTRUCTION OF SIDEWALK
*may only be used with written permission of City Engineer

NOTES:

1. Curb, gutter and sidewalk shall be poured monolithically.
2. Full depth of street structural section shall extend under curb and gutter (MIN 6" Class 2 aggregate base at 95% compaction).
3. Where sidewalk and/or curb and gutter are to be removed or repaired, the concrete shall be removed by saw cutting its full depth at the nearest score mark or joint. When the area of work is less than 5 feet from any joint or crack, the removal shall be extended to nearest joint or crack.
4. Install two #4 dowels - 6" long, centered in concrete gutter pan with 3" embedment to secure to adjacent curb and gutter.
5. Where the existing AC pavement surface covers the gutter pan, the replacement curb and gutter shall be installed and broom finished to match the adjacent curb and gutter, and the AC shall be re-installed over the gutter pan to preserve the flow line.
6. Jointing:
   a. All joints shall be straight and perpendicular to the longitudinal axis of the sidewalk and/or curb.
   b. Weakened plane joints shall be ⅛" wide and 1" deep in sidewalks and ⅛" wide and 1½" deep in curb and gutter, spaced 10' on center and at back of curb. Weakened plane joints in sidewalks shall match joints in the curb and gutter.
   c. Expansion joint material shall be ½" thick premolded joint filler placed through the full thickness of the concrete every 30'. Where pouring up against a cold joint or saw cut, no joint fill shall be used.
   d. Score marks on sidewalks shall be installed to match adjacent sidewalk with a MAX spacing of every 5'.
   e. Sidewalks wider than 5 feet shall have a longitudinal score mark installed along the center of the sidewalk.
7. Where new curb crosses water and/or sewer lines, the face of the curb at the crossing(s) shall be impressed with a 3" tall "W" or "S" symbol, respectively. The "W" and "S" symbols may be checked out from Public Works at the CDC.
8. All exposed surfaces shall have a medium broom finish. Sidewalks and driveways shall be broom finished perpendicular to the longitudinal axis of the sidewalk.
9. Contractor shall be responsible for protecting fresh concrete from damage of any kind, regardless of the source.

CITY OF HEALDSBURG CALIFORNIA SINCE 1867	CURB, GUTTER and SIDEWALK			STANDARD DETAIL ST03
	SCALE: NONE	APPROVED: M.T. Kim	DATE: 8/2008	

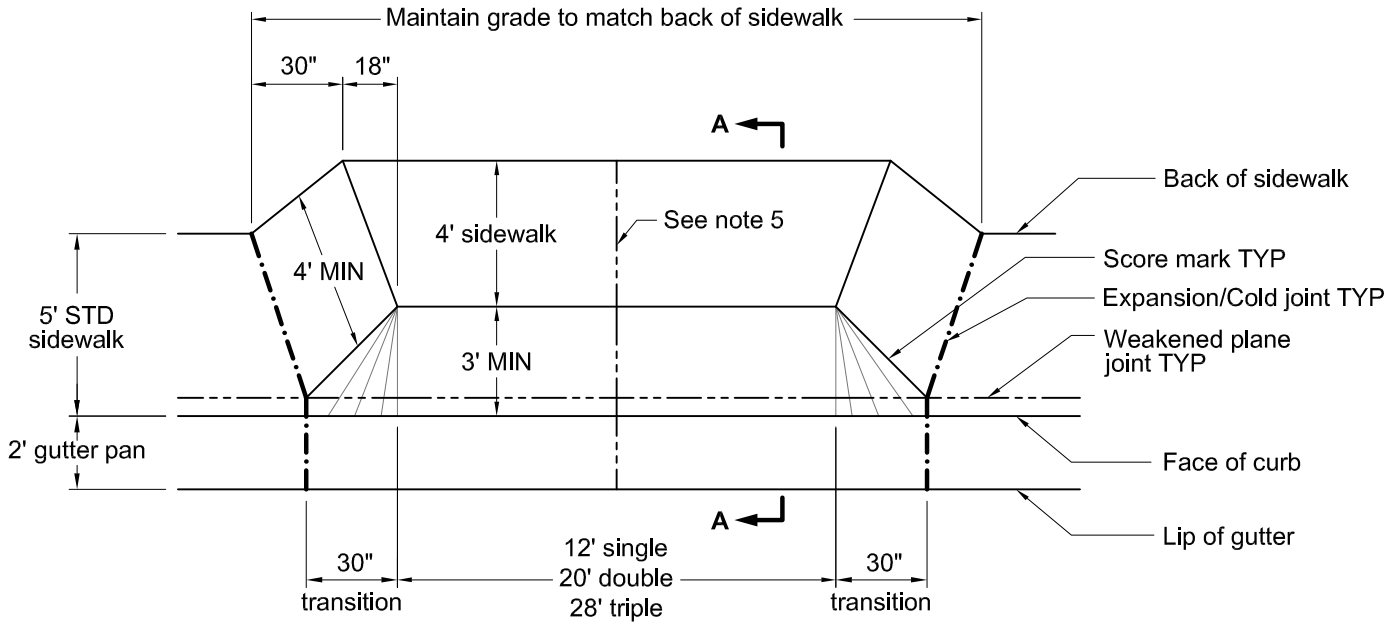

PLAN VIEW

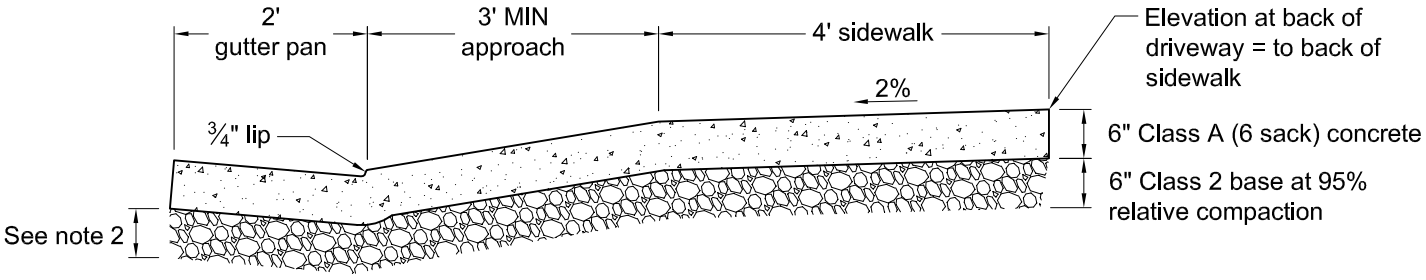

SECTION A-A

NOTES:

1. Driveways shall be located a MIN of 2.5' from a property line and a MIN of 5' from a water meter or other utility box, adjacent driveway, sign post, power pole, fire hydrant, etc. (as measured from the top of the driveway transition).
2. Match existing street structural section (6" MIN) with Class 2 base at 95% relative compaction.
3. Total width of driveway approach(s) shall not exceed 40% of lot frontage.
4. The driveway shall be poured monolithically with the curb and gutter.
5. Jointing (between expansion joints):
   a. Weakened plane joints shall be installed at 10' MAX spacing and run continuous through the sidewalk, approach and gutter pan.
   b. Score marks through 4' sidewalk section shall be installed to match adjacent sidewalk with a 5' MAX spacing.
6. See ST03 for additional information.

CITY OF HEALDSBURG CALIFORNIA SINCE 1867	DRIVEWAY APPROACH			STANDARD DETAIL ST04
	SCALE: NONE	APPROVED:	DATE: 8/2008	

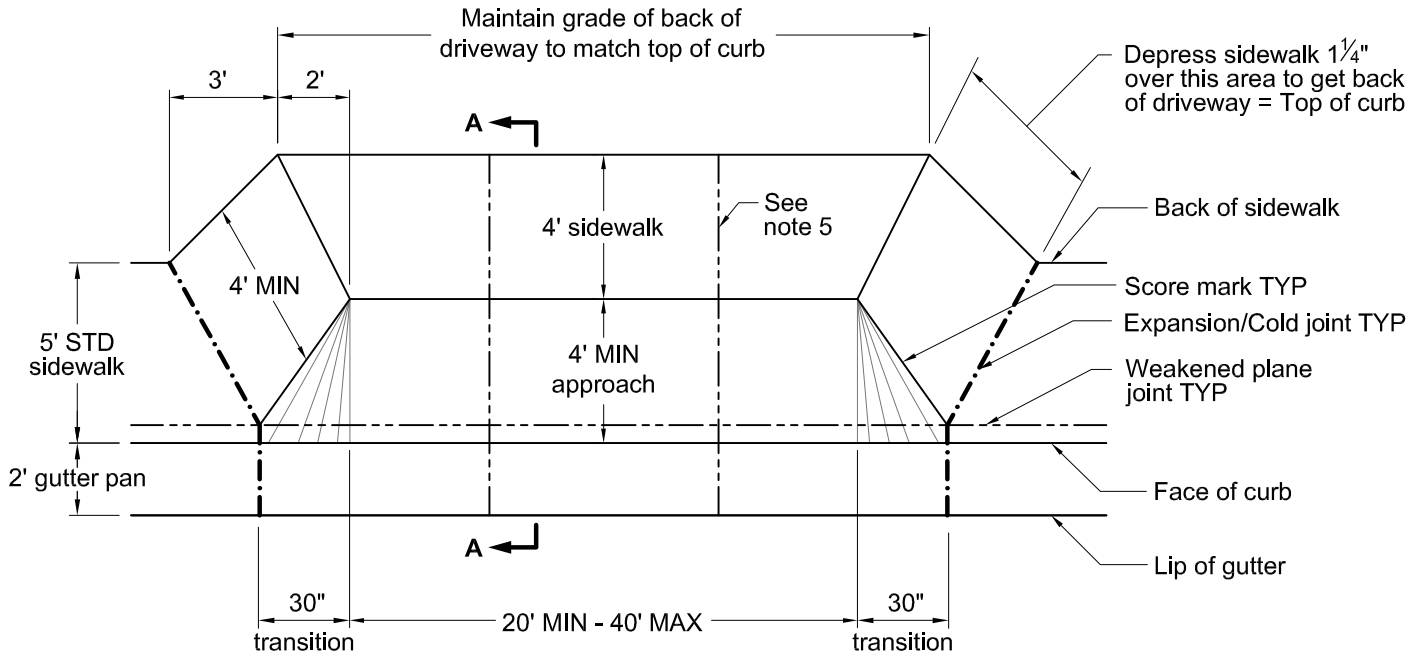

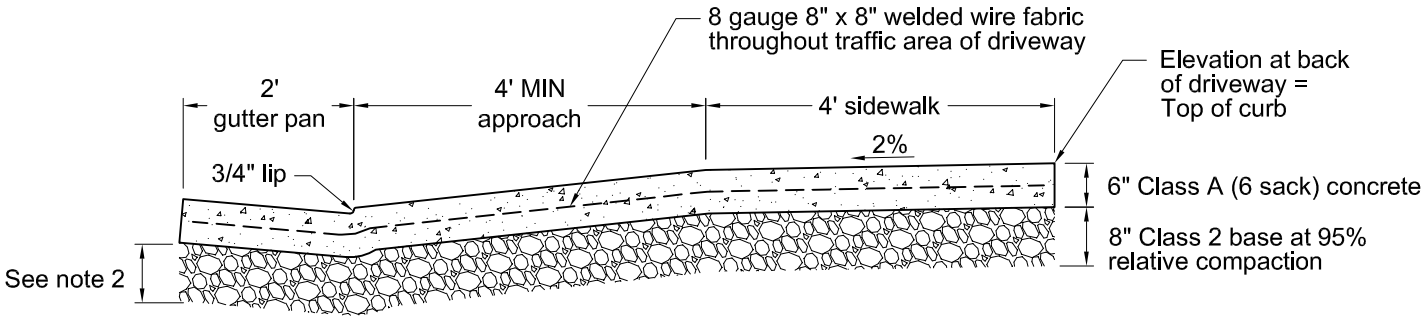

SECTION A-A

NOTES:

1. Driveways shall be located a MIN of 2.5' from a property line and a MIN of 5' from a water meter or other utility box, adjacent driveway, sign post, power pole, fire hydrant, etc. (as measured from the top of the driveway transition).
2. Match existing street structural section (6" MIN) with Class 2 base at 95% relative compaction.
3. Total width of driveway approach(s) shall not exceed 40% of lot frontage.
4. The driveway shall be poured monolithically with the curb and gutter.
5. Jointing (between expansion joints):
   a. Weakened plane joints shall be installed at 10' MAX spacing and run continuous through the sidewalk, approach and gutter pan.
   b. Score marks through 4' sidewalk section shall be installed to match adjacent sidewalk with a 5' MAX spacing.
6. See ST03 for additional information.

CITY OF HEALDSBURG CALIFORNIA SINCE 1867	DRIVEWAY APPROACH High Speed		STANDARD DETAIL ST05
	SCALE: NONE	APPROVED: M.T. Kerr	DATE: 8/2008

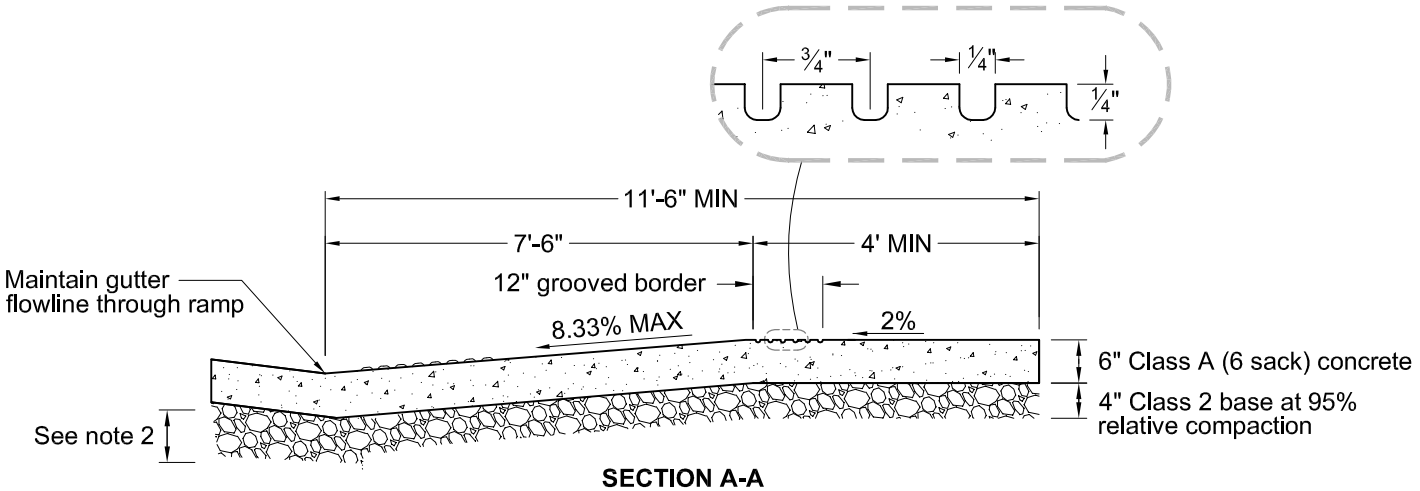

SECTION A-A

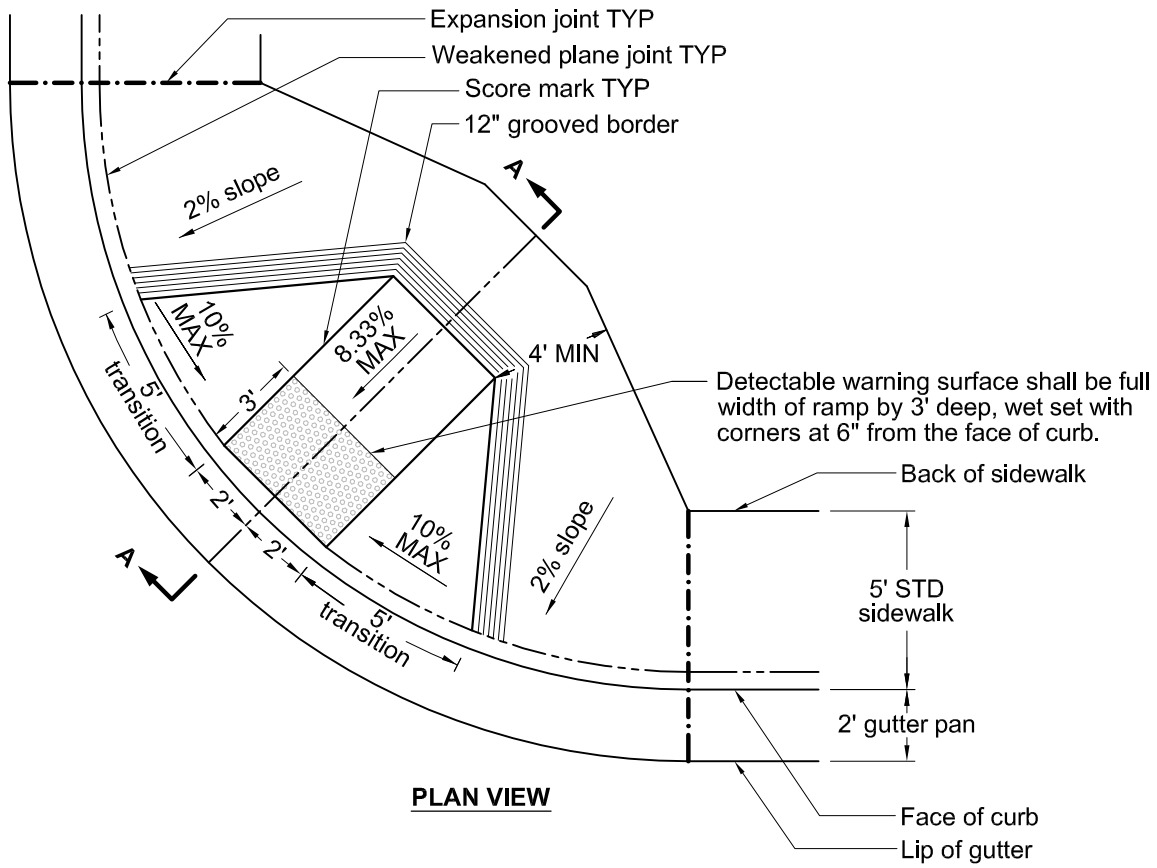

PLAN VIEW

NOTES:

1. All poles, boxes, cabinets and other utilities shall be relocated out of the curb ramp.
2. Match existing street structural section (6" MIN) with Class 2 base at 95% relative compaction.
3. The ramp shall be poured monolithically with the curb and gutter.
4. Joint spacing (expansion, weakened plane and score marks) shall be 5' MAX in any direction.
5. Dimensions shown are based on a 6" standard curb height.

APPROVED MATERIALS (see complete list)**:**

1. Detectable Warning Surface:
   a. Armor-Tile ADA-C-3648-YW (federal yellow), sized to fit

CITY OF HEALDSBURG CALIFORNIA SINCE 1867	CURB RAMP Type "A"		STANDARD DETAIL ST06
	SCALE: NONE	APPROVED: M.T. Kerr	DATE: 8/2008

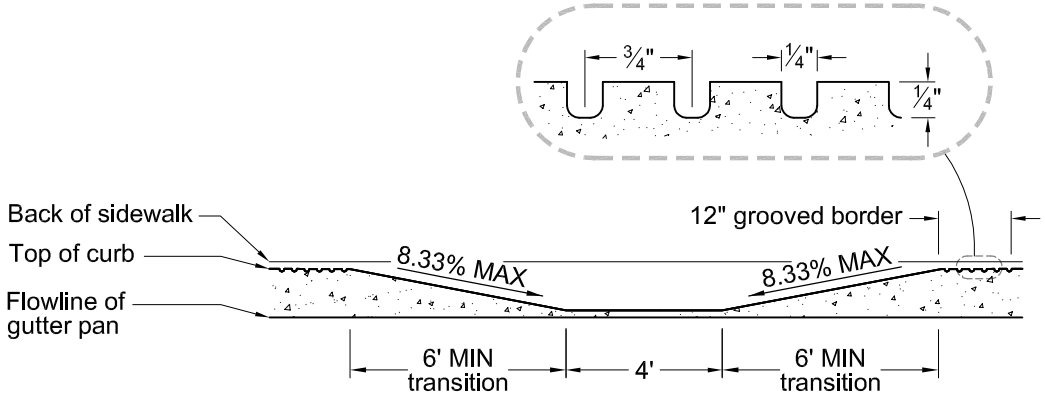

SECTION B-B: ALONG FACE OF CURB

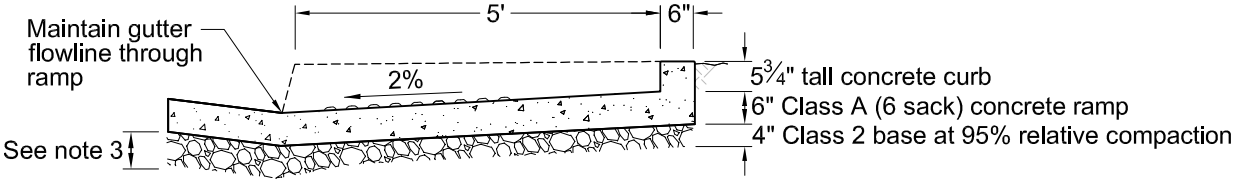

SECTION A-A

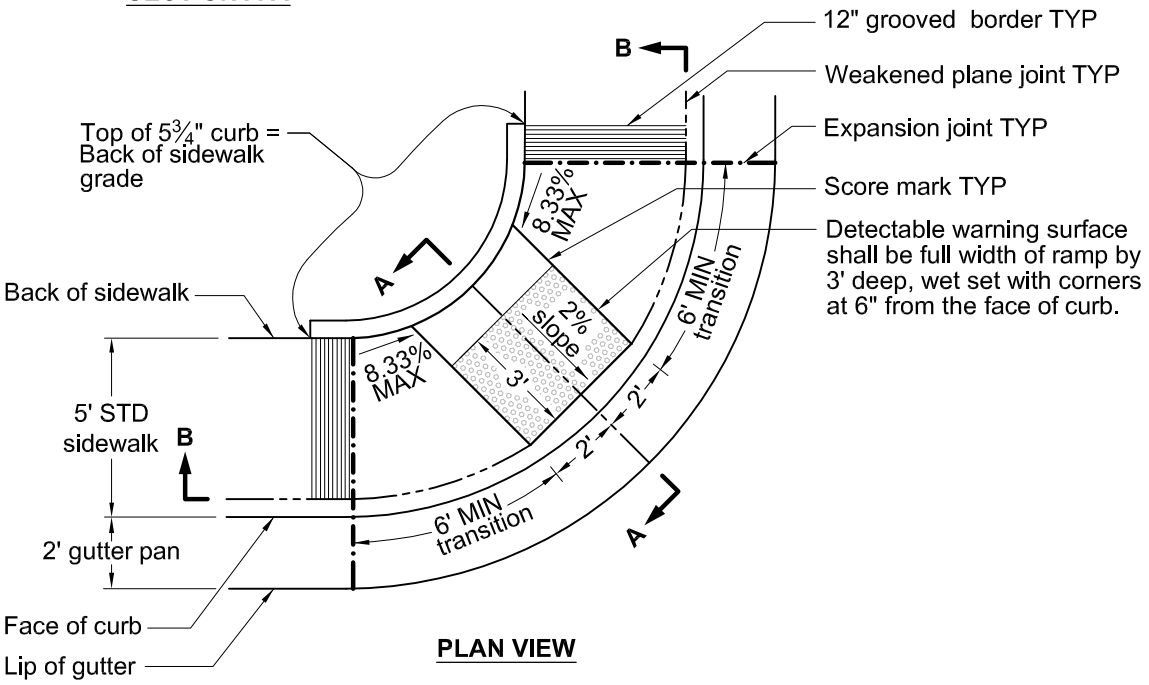

PLAN VIEW

NOTES:

1. Type "B" ramps may only be used in situations where a 4' sidewalk cannot be obtained behind the back of the ramp.
2. All poles, boxes, cabinets and other utilities shall be relocated out of the curb ramp.
3. Match existing street structural section (6" MIN) with Class 2 base at 95% relative compaction.
4. The ramp shall be poured monolithically with the curb and gutter.
5. Joint spacing (expansion, weakened plane and score marks) shall be 5' MAX in any direction.
6. Dimensions shown are based on a 6" standard curb height.

APPROVED MATERIALS (see complete list)**:**

1. Detectable Warning Surface:
   a. Armor-Tile ADA-C-3648-YW (federal yellow), sized to fit

CITY OF HEALDSBURG CALIFORNIA SINCE 1867	CURB RAMP Type "B"		STANDARD DETAIL ST07
	SCALE: NONE	APPROVED: M.T. Kerr	DATE: 8/2008

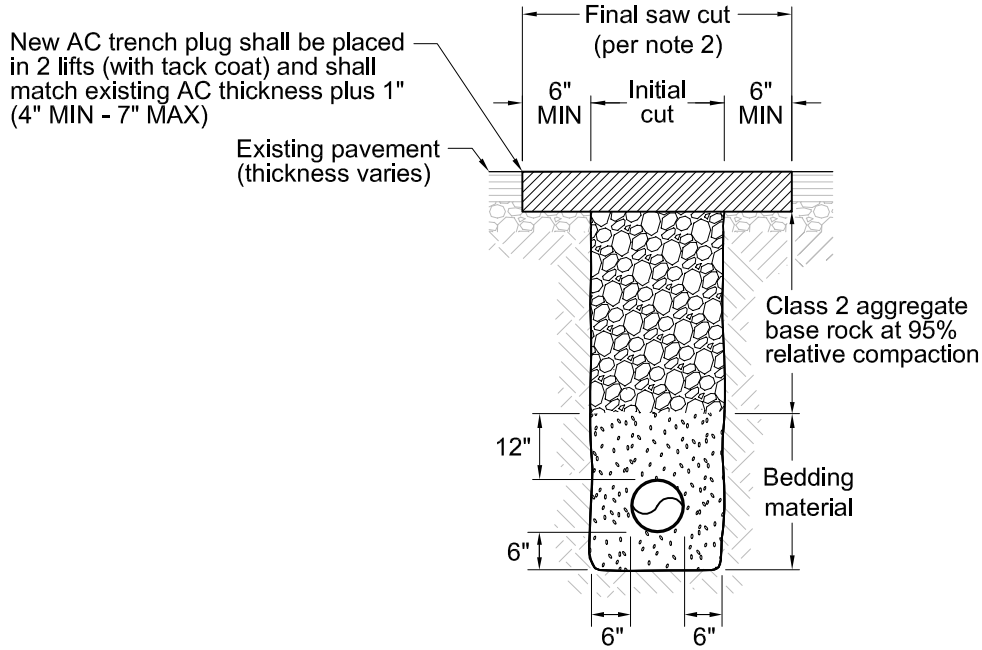

ROADWAYS

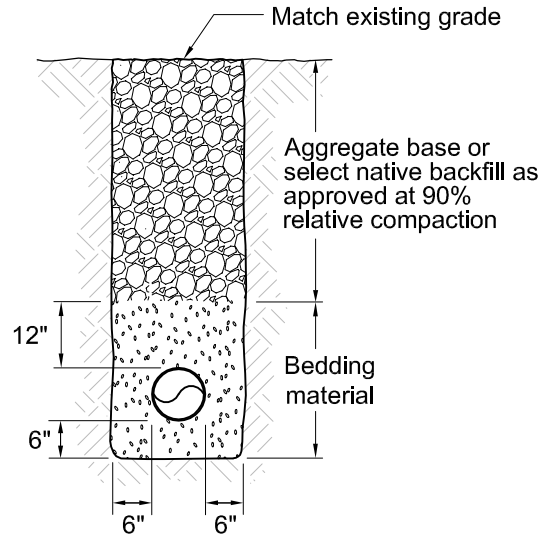

NON-ROADWAY AREAS

NOTES:

1. Where existing street is concrete overlaid with AC, the concrete section removed by trenching shall not be replaced.
2. Final trench paving is required to be expanded to a painted lane stripe, existing pavement patch, the lip of gutter or edge of pavement where such street feature is within 3 feet of the final saw cut.
3. Permanent paving must be completed within 30 days. AC or cutback (1" thick) may be placed as a temporary surface in roadway areas and shall be maintained until permanent paving is completed. Where warranted and at the discretion of the Public Works Inspector, trench plates may be used for up to 2 weeks. Trench plates shall have a skid resistant surface, secured with 24" wide collar of cutback around all sides of plate, and tapered to provide smooth transitions.

CITY OF HEALDSBURG
CALIFORNIA
SINCE 1867

SCALE: NONE

APPROVED:

DATE: 8/2008

TRENCH
Backfill and Resurfacing

STANDARD DETAIL

ST08

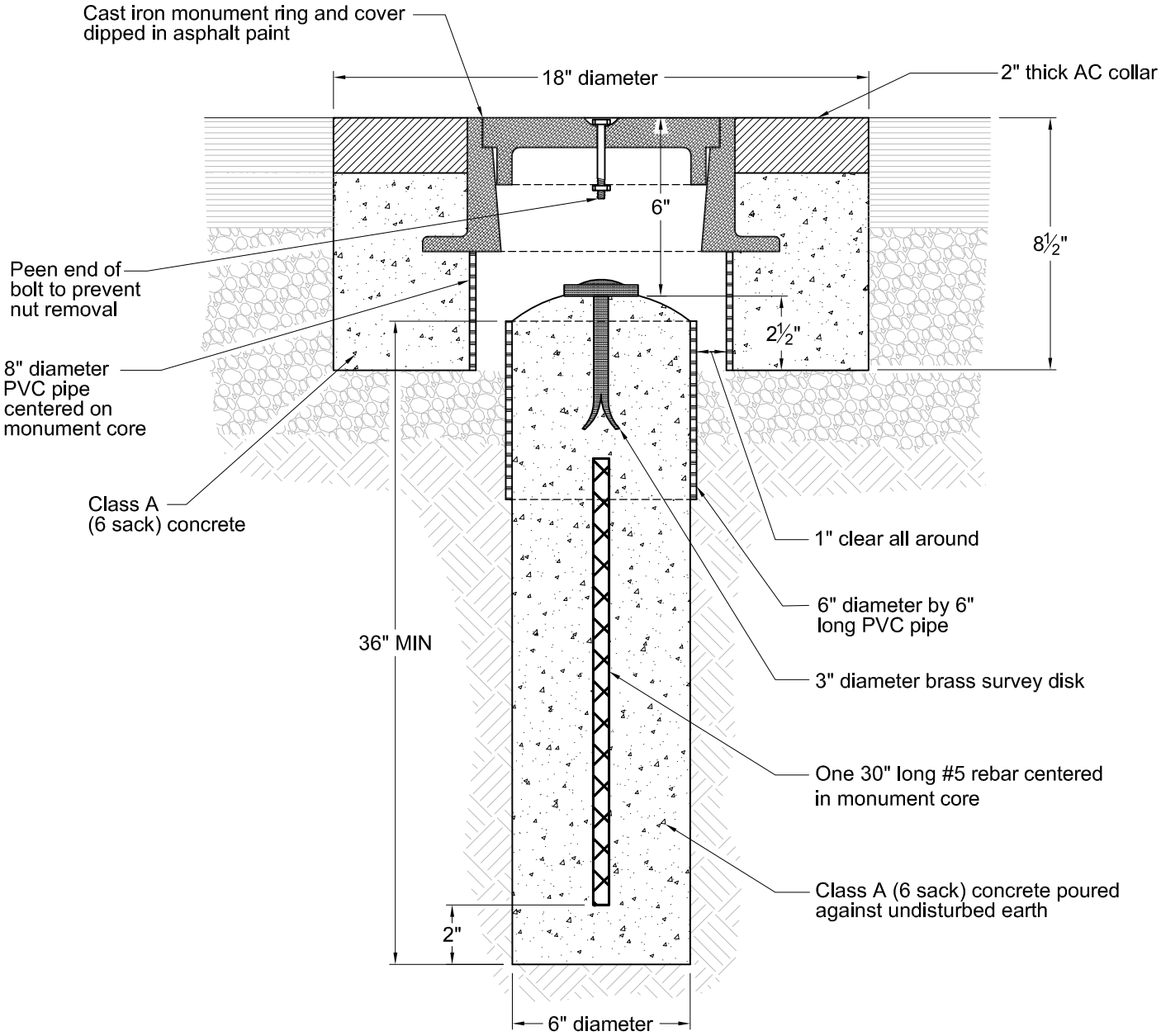

NOTES:

1. Finished top of monument core smooth and round with no concrete above edge of brass survey disk.

APPROVED MATERIALS (see complete list)**:**

1. Cast Iron Monument Ring and Cover:
   a. D&L Foundry K6001
   b. Southbay Foundry B1000

CITY OF HEALDSBURG CALIFORNIA SINCE 1867	SURVEY MONUMENT			STANDARD DETAIL ST09
	SCALE: NONE	APPROVED: M.T. Kim	DATE: 8/2008	

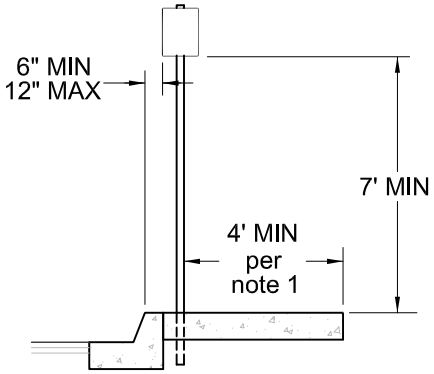

REGULATORY AND WARNING SIGNS

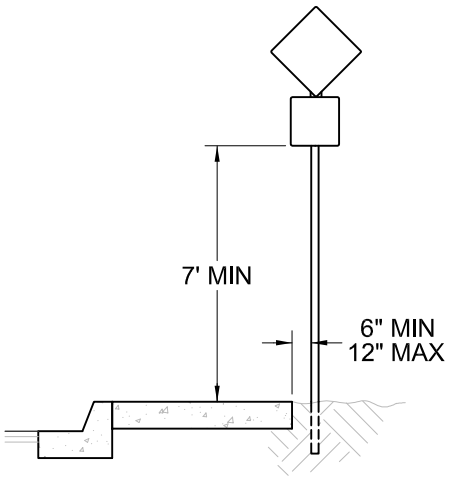

GUIDE SIGNS

SIDEWALK ATTACHED TO CURB

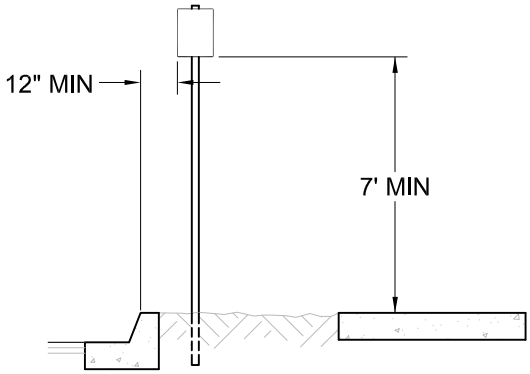

ALL SIGNS

SIDEWALK SEPARATED FROM CURB OR NO SIDEWALK

NOTES:

1. Extend sidewalk around sign post per ST16 when necessary to maintain 4' clear sidewalk.
2. Signs shall conform to Caltrans requirements (size, format, color & 0.080" aluminum panels).
3. Signs shall be centered and bolted directly to the post.
4. Sign posts shall be installed per ST11.

CITY OF HEALDSBURG CALIFORNIA SINCE 1867	STREET SIGN Typical Location			STANDARD DETAIL ST10
	SCALE: NONE	APPROVED: M.T. Kim	DATE: 8/2008	

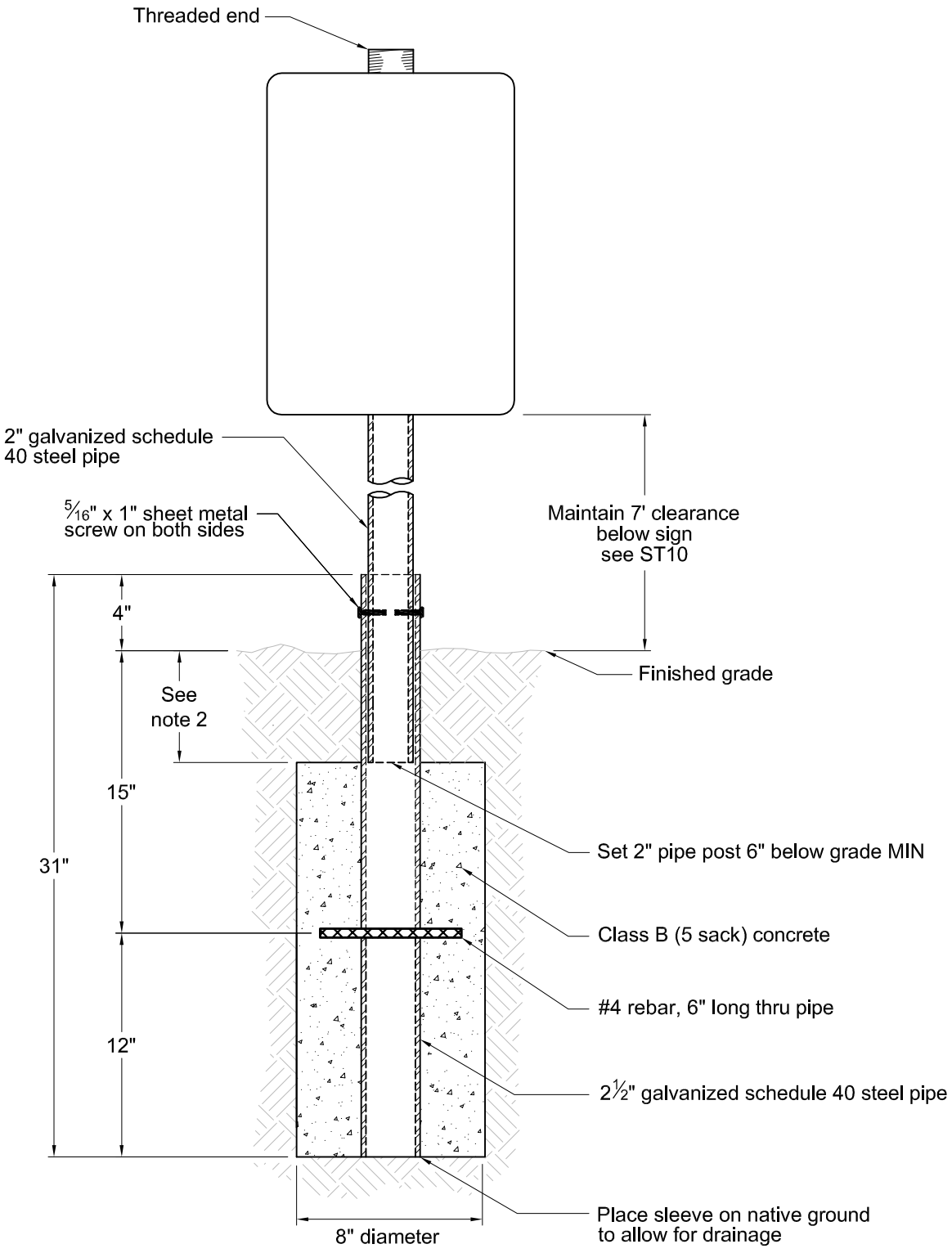

NOTES:

1. Post hole shall be hand excavated if underground utilities are present.
2. Cover shall be 6" of soil or 4" concrete sidewalk.

CITY OF HEALDSBURG CALIFORNIA SINCE 1867	STREET SIGN Post and Sleeve Installation		STANDARD DETAIL ST11
	SCALE: NONE	APPROVED: M.T. Kim	DATE: 8/2008

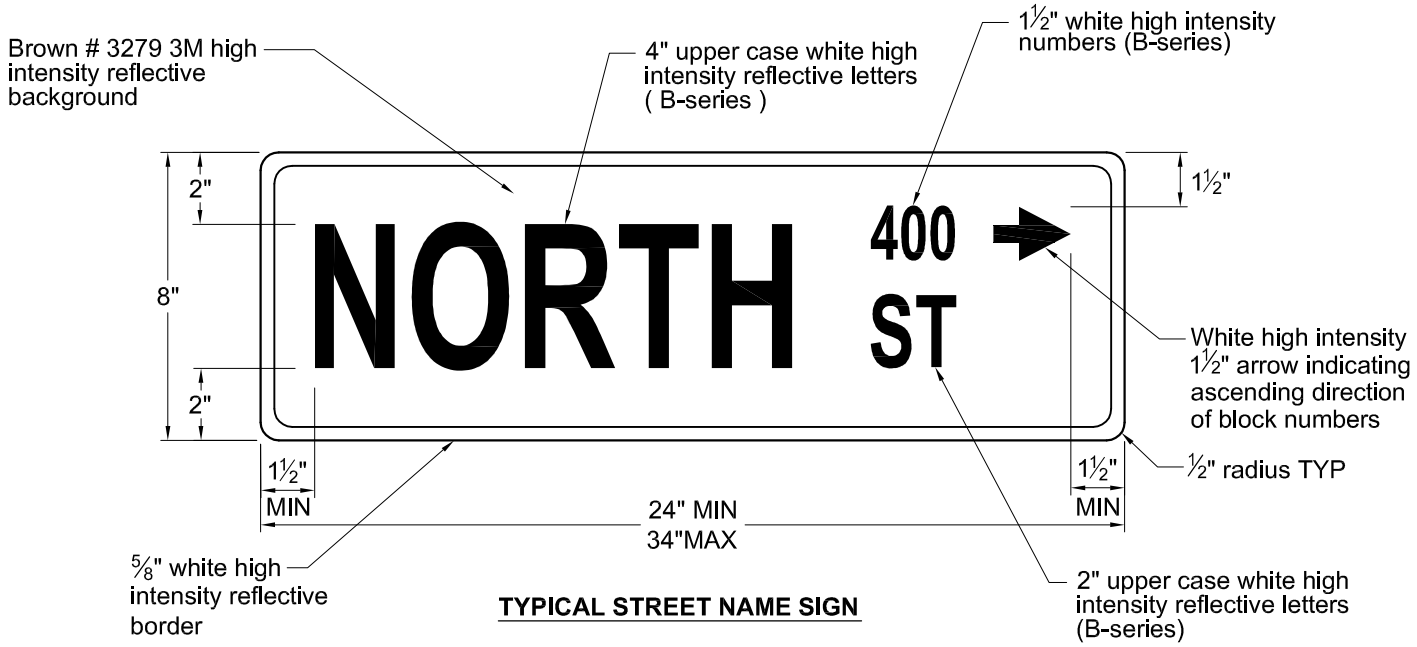

TYPICAL STREET NAME SIGN

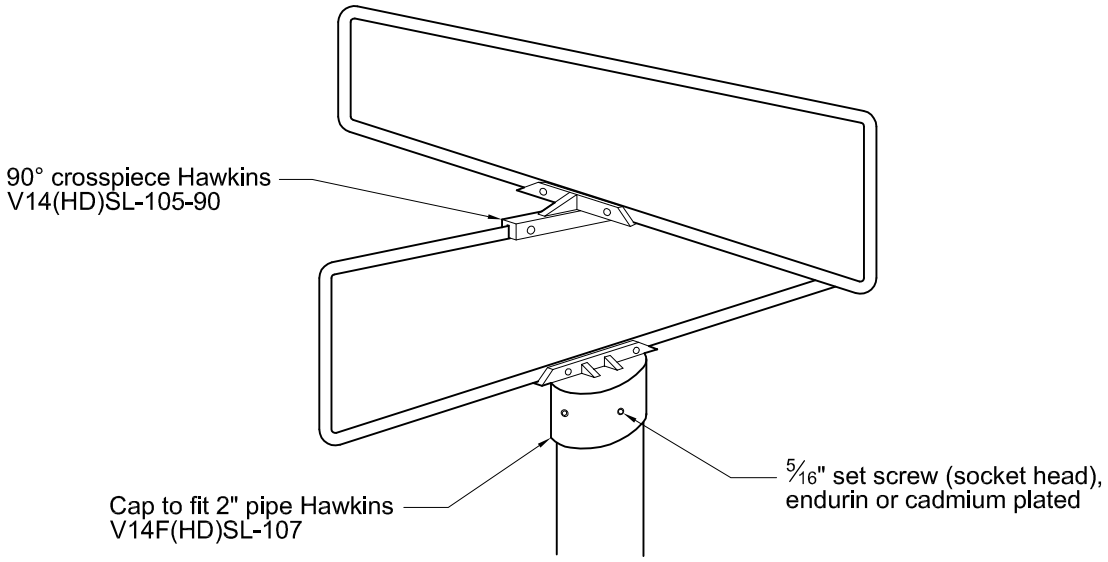

POLE MOUNTING HARDWARE

NOTES:

1. Sign blanks shall be 0.080" aluminum per Caltrans specifications.
2. Spacing of letters, words, and abbreviations per Caltrans specifications.
3. Signs shall be double faced.
4. Sign posts shall be installed per ST11.
5. All signs shall be centered on pole and level at time of installation.

CITY OF HEALDSBURG CALIFORNIA SINCE 1867	STREET SIGN Street Name			STANDARD DETAIL ST12
	SCALE: NONE	APPROVED: M.T. Kerr	DATE: 8/2008	

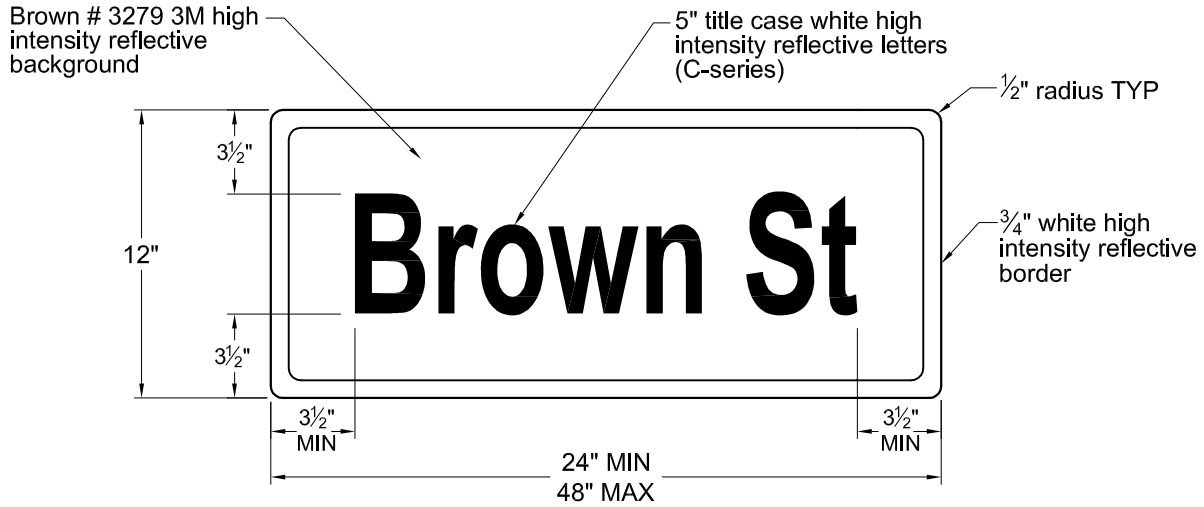

TYPICAL ADVANCE STEET NAME SIGN

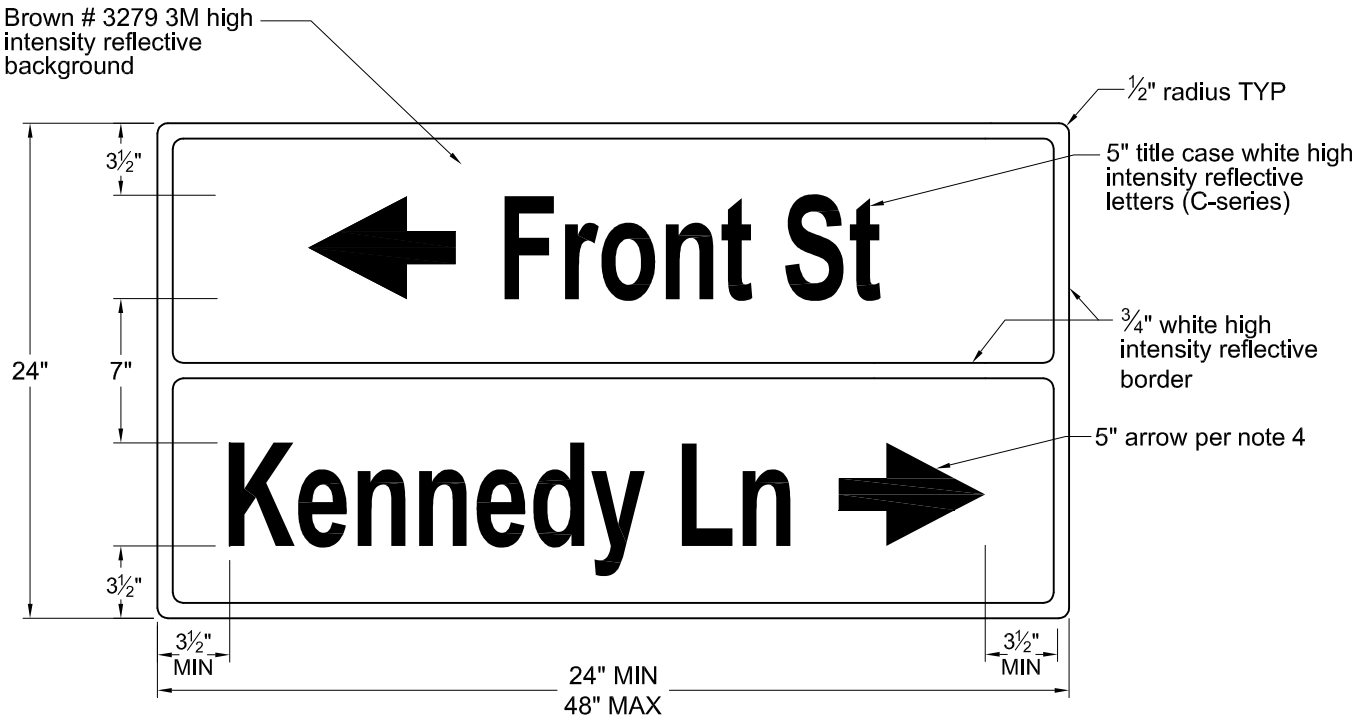

STREET NAME CHANGE

NOTES:

1. Sign blanks shall be 0.080" aluminum per Caltrans specifications.
2. Spacing of letters, words, and abbreviations per Caltrans specifications.
3. B-series lettering may be used if street name is too long for MAX sign length.
4. At "T" intersections or intersections where a street name changes, a 5" arrow shall be added to the sign. The arrow shall be solid white high intensity reflective material and shall point in the direction of the associated street as shown in the above detail.
5. Sign posts shall be installed per ST11.
6. All signs shall be centered on pole and level at time of installation. Signs over 36" long shall be mounted with U-post brace.

CITY OF HEALDSBURG CALIFORNIA SINCE 1867	STREET SIGN Advance Street Name		STANDARD DETAIL ST13
	SCALE: NONE	APPROVED: M.T. Kim	DATE: 8/2008

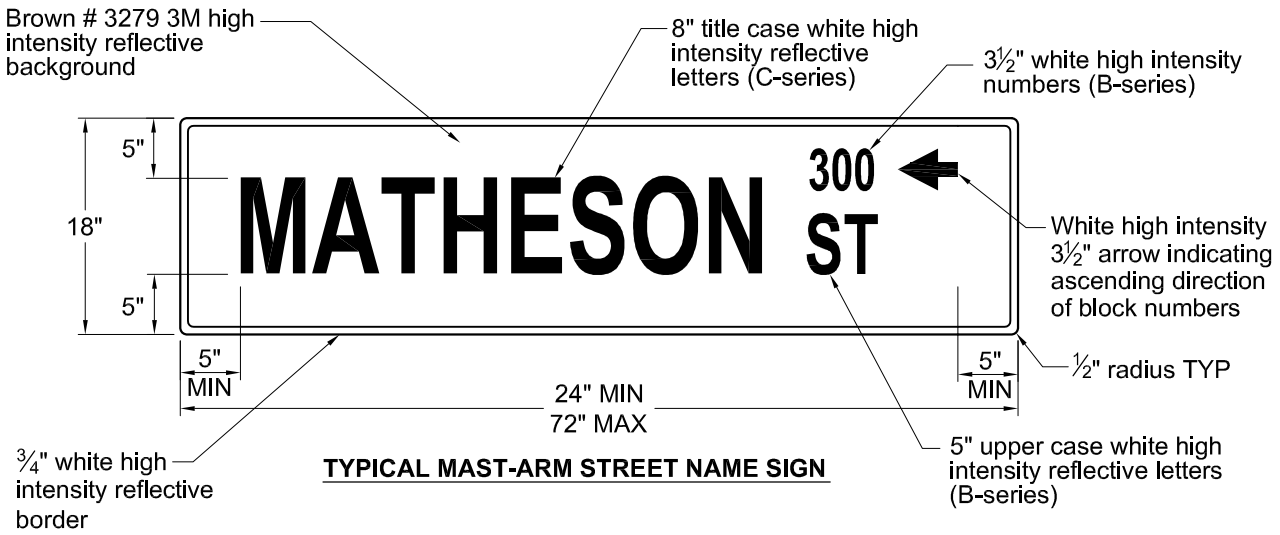

TYPICAL MAST-ARM STREET NAME SIGN

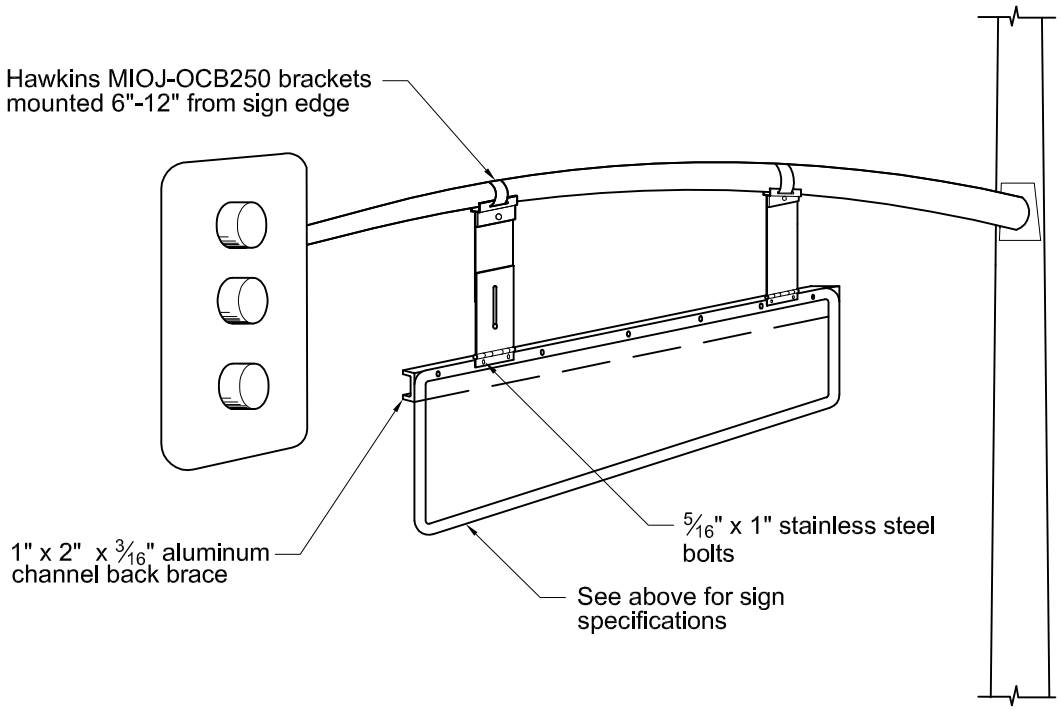

TYPICAL MAST-ARM STREET NAME SIGN INSTALLATION

NOTES:

1. Sign blanks shall be 0.125" aluminum per Caltrans specifications.
2. Signs shall be double-faced.
3. Spacing of letters, words, and abbreviations per Caltrans specifications.
4. At "T" intersections or intersections where the street name changes, a 8" arrow shall be added to the sign. The arrow shall be solid white high intensity reflective material and shall point in the direction of the associated street similar to ST13.
5. B-series lettering may be used if the street name is too long for MAX sign length.
6. Location of sign mounting on the mast arm shall be determined by the City Engineer during the plan check process.

CITY OF HEALDSBURG CALIFORNIA SINCE 1867	STREET SIGN Mast Arm Mounted			STANDARD DETAIL ST14
	SCALE: NONE	APPROVED: M.T. Kerr	DATE: 8/2008	

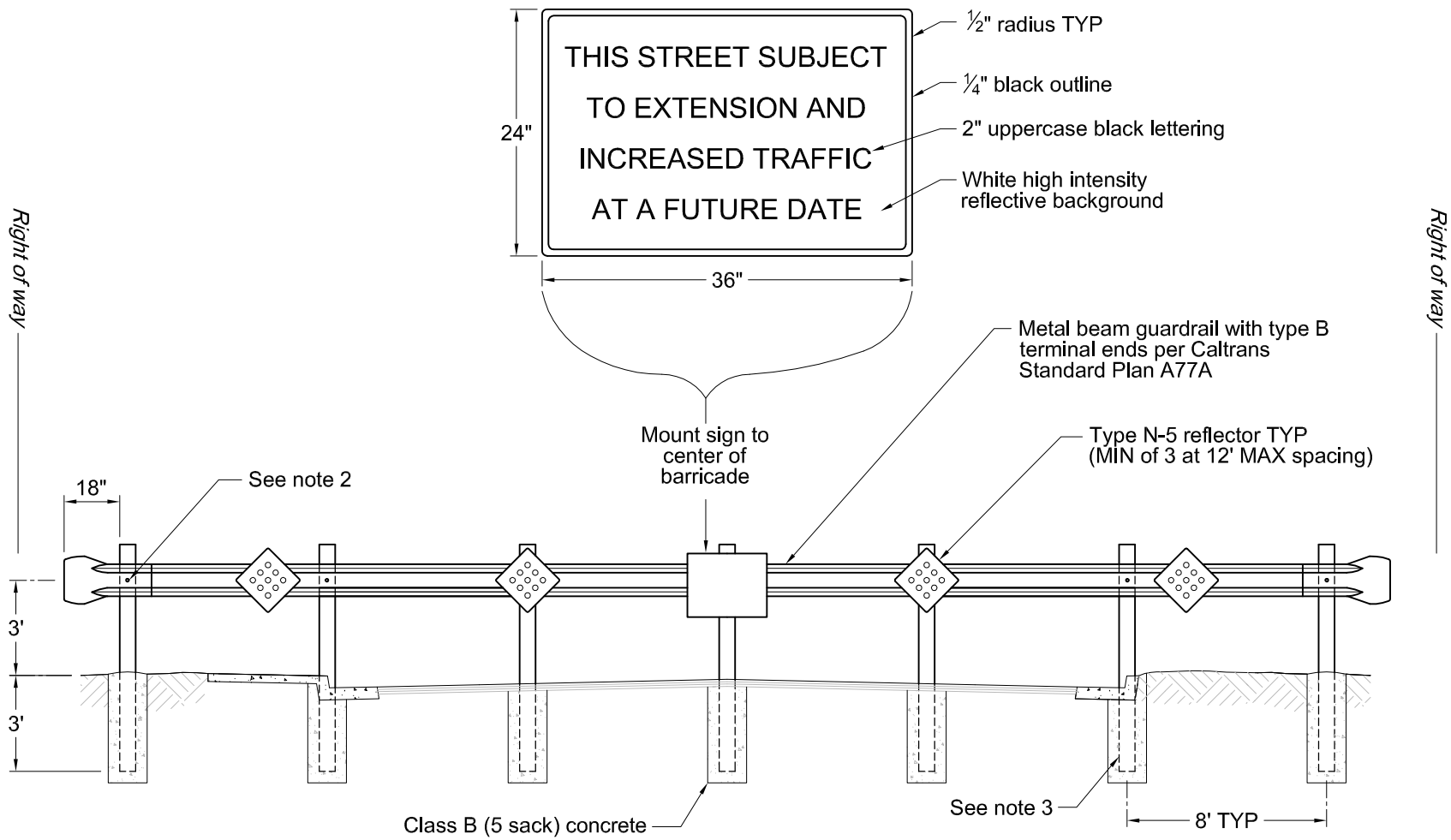

NOTES:

1. The barricade shall be placed immediatly behind the end of the street improvements and extend across the entire right-of-way.
2. ½" carriage bolt with cut washer and hex nut shall be used to attach guardrail to each post. Bolts shall not extend more than ¼" beyond end of the hex nut.
3. Posts shall be 7' long: W 4 x 6 steel posts or 6" x 6" wood posts.
4. All steel components shall be hot dipped galvanized and all wood components shall be pressure treated per Caltrans Specification Section 83.
5. Sign blanks shall be 0.080" aluminum per Caltrans specifications.
6. Signs shall be single faced.

CITY OF HEALDSBURG
CALIFORNIA
SINCE 1867

SCALE: NONE

APPROVED: M.T. Kim

DATE: 8/2008

STREET BARRICADE

STANDARD DETAIL

ST15

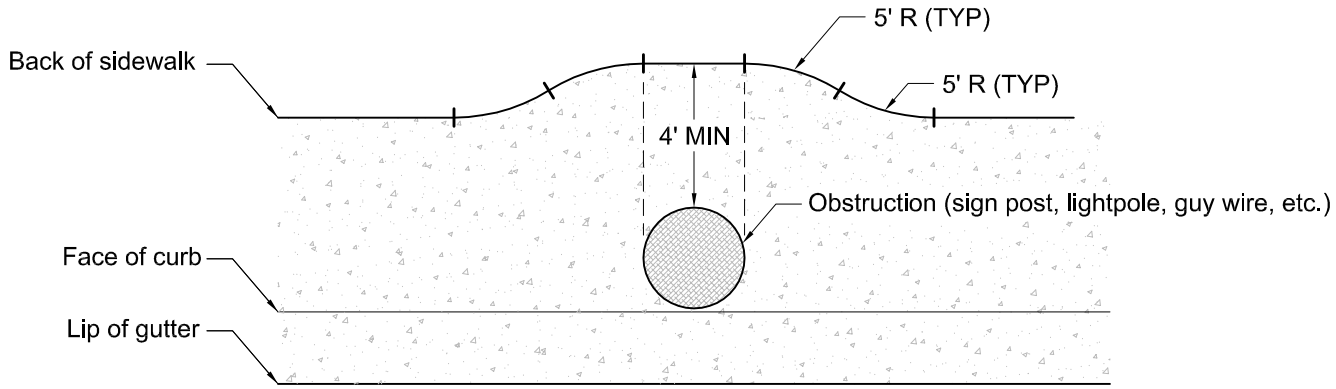

NOTES:

1. 4' MIN clearance shall be maintained around obstruction.

CITY OF HEALDSBURG
CALIFORNIA
SINCE 1867

SIDEWALK OBSTRUCTION

SCALE: NONE

APPROVED: M.T. Kim

DATE: 8/2008

STANDARD DETAIL

ST16

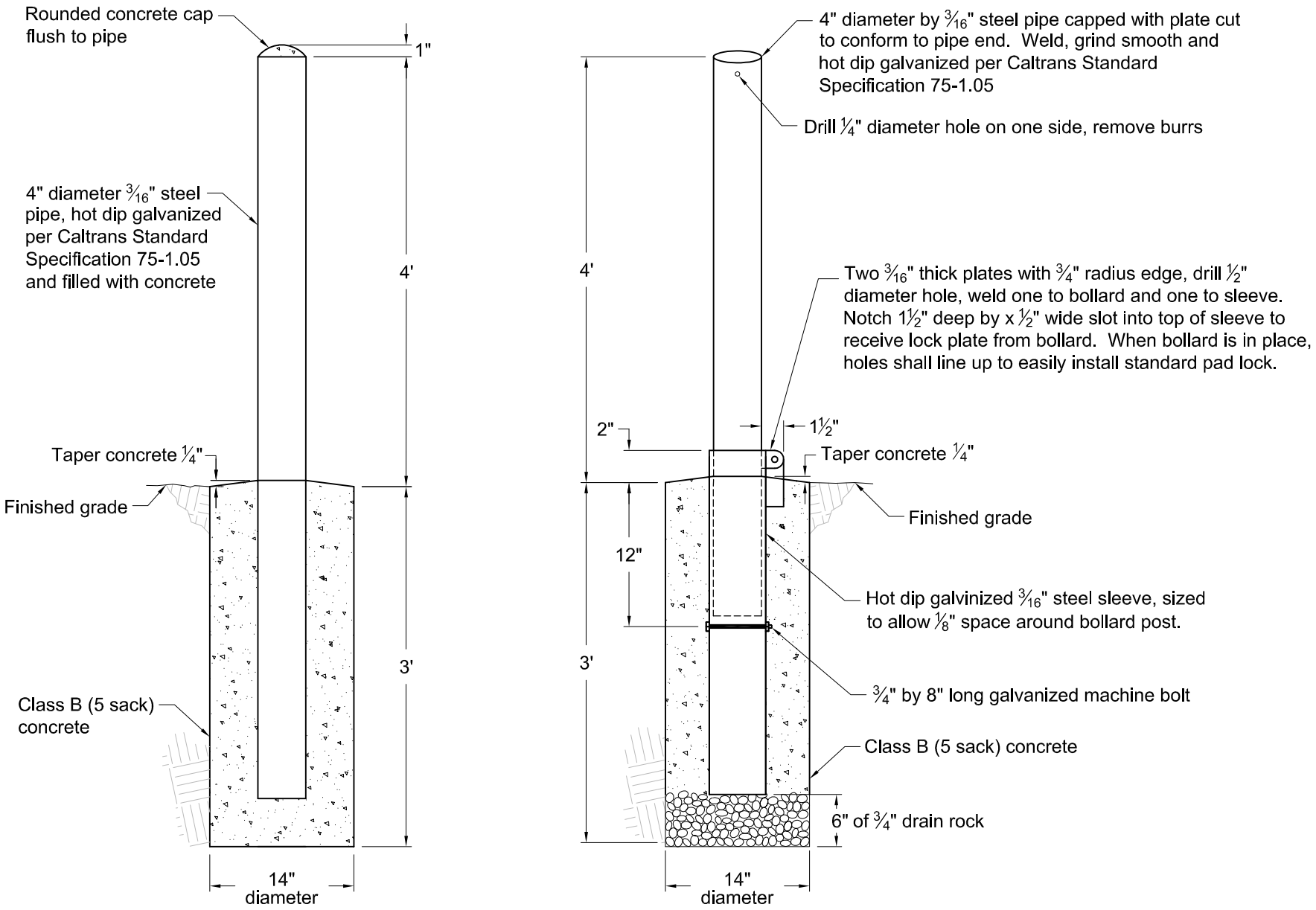

NON-REMOVABLE BOLLARD

REMOVABLE / LOCKABLE BOLLARD

NOTES:

1. Post hole shall be hand excavated if underground utilities are present.

CITY OF HEALDSBURG
CALIFORNIA
SINCE 1867

BOLLARD

SCALE: NONE

APPROVED: M.T. Kim

DATE: 8/2008

STANDARD DETAIL

ST17

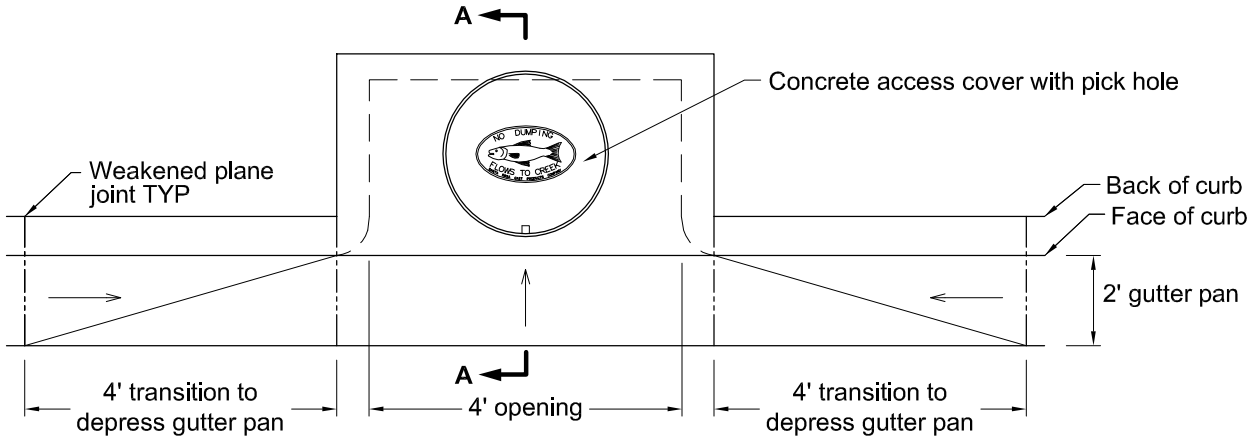

PLAN VIEW

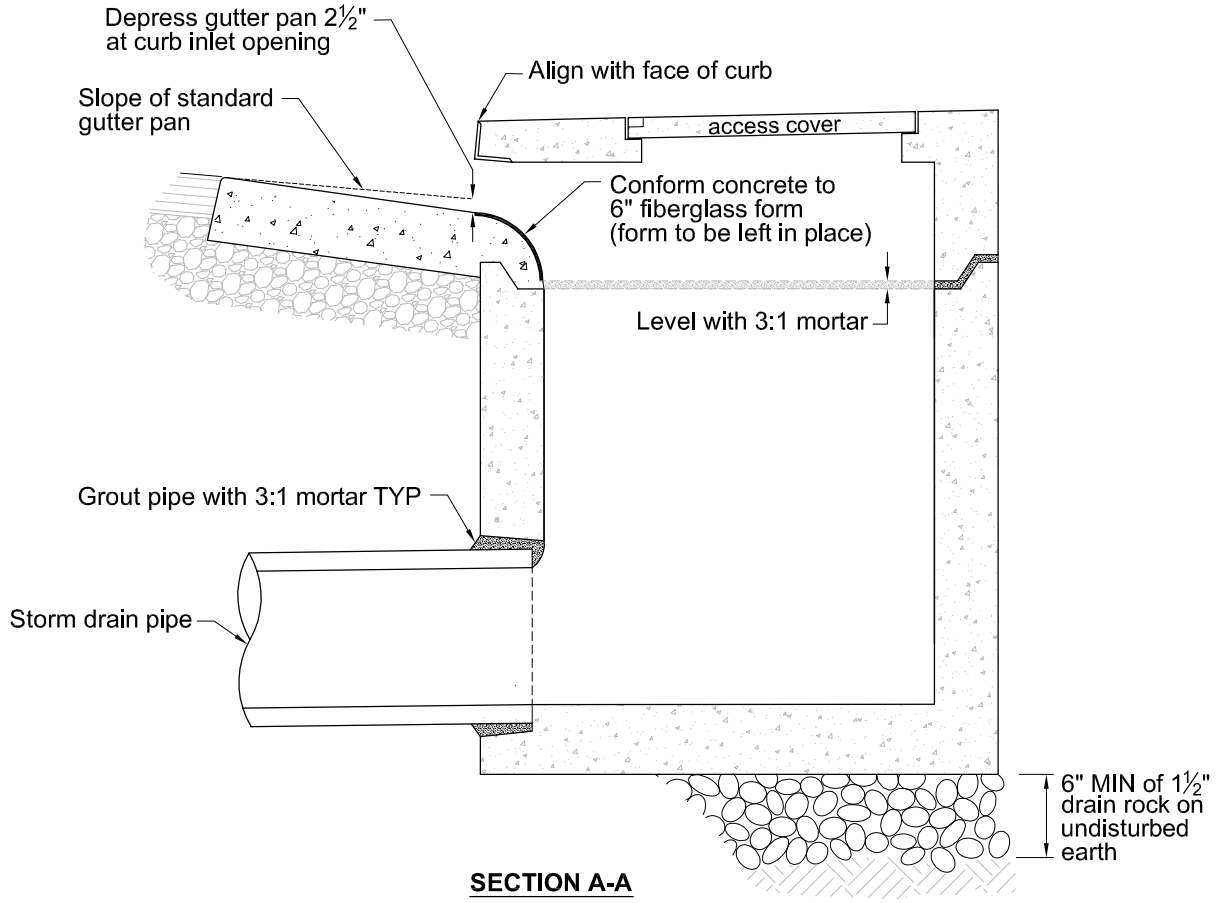

SECTION A-A

NOTES:

1. Where a cast-in-place box is used:
   a. Wall Thickness - 6" for boxes up to 8' deep and 8" for boxes deeper than 8'.
   b. Rebar - #4 at 12" on center
   c. Concrete - Class A (6 sack)
2. No steps permitted in curb inlet.

APPROVED MATERIALS (see complete list)**:**

1. Curb Inlet: US Concrete Group 4AC hood with CP3648 base
2. Access Cover: US Concrete Group concrete cover with NPDES cast iron logo and pick hole

CITY OF HEALDSBURG CALIFORNIA SINCE 1867	CURB INLET		STANDARD DETAIL SD01
SCALE: NONE	APPROVED: M.T. Kerr	DATE: 8/2008	

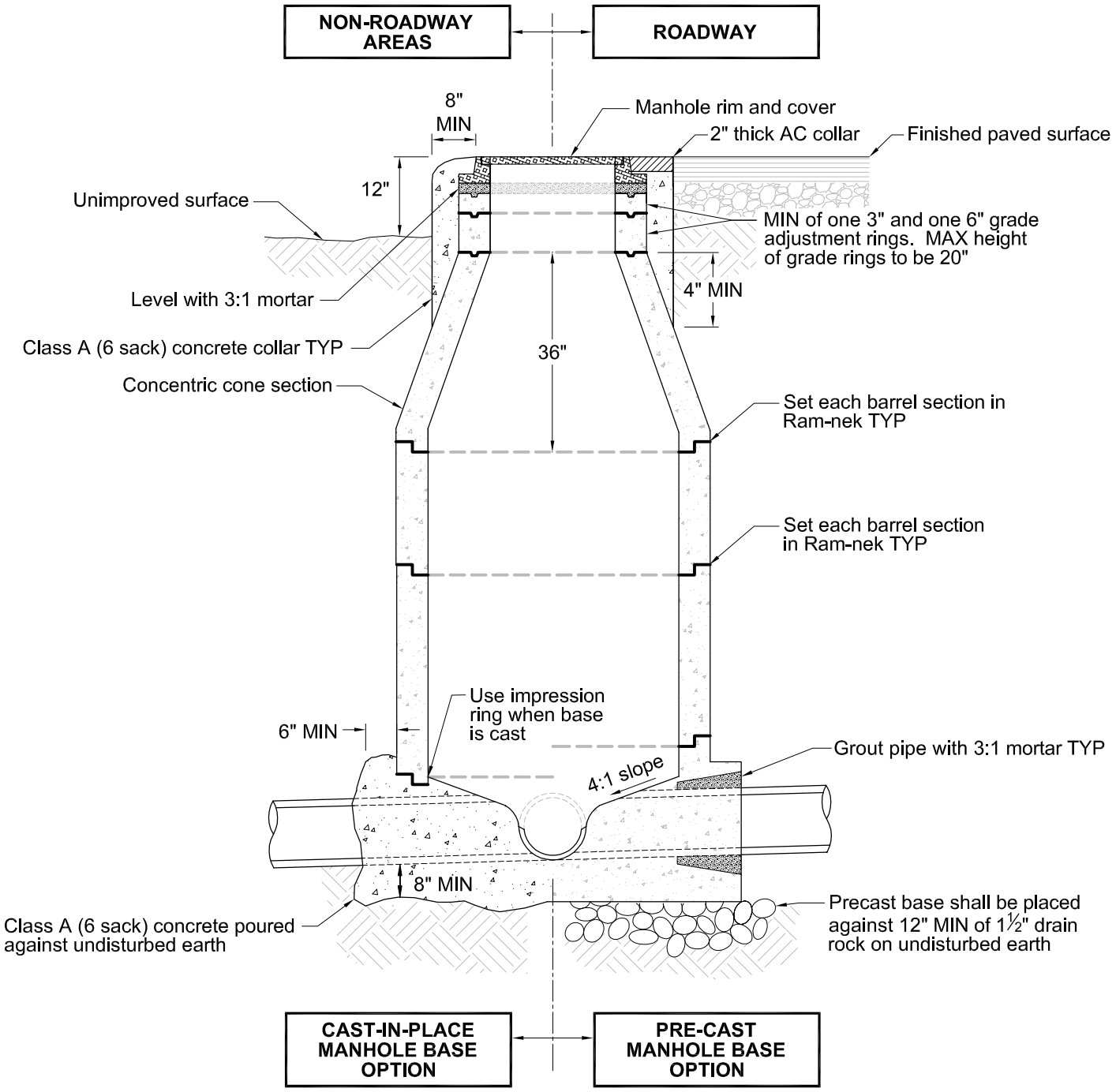

NOTES:

1. After lower ring section is set, break out top half of pipe (leave lower half of pipe in place) flush with inside face of manhole wall and construct shelf and U-shaped channel. Make elevation changes gradual and directional changes with smooth curves. Slope and size of channels shall match upstream and downstream pipes.
2. No steps are permitted in the manhole.

APPROVED MATERIALS (see complete list):

1. Manhole Structure:
   a. Pipe smaller than 18" - US Concrete Group 20-48C
   b. 18" to 48" pipe - US Concrete Group 20-60CC
2. Frame and Cover (marked "STORM DRAIN" with open or closed pick hole):
   a. South Bay Foundry 1900
   b. D&L Supply A-1024

CITY OF HEALDSBURG CALIFORNIA SINCE 1867	STORM DRAIN MANHOLE		STANDARD DETAIL SD02
SCALE: NONE	APPROVED: M.T. Kerr	DATE: 8/2008	

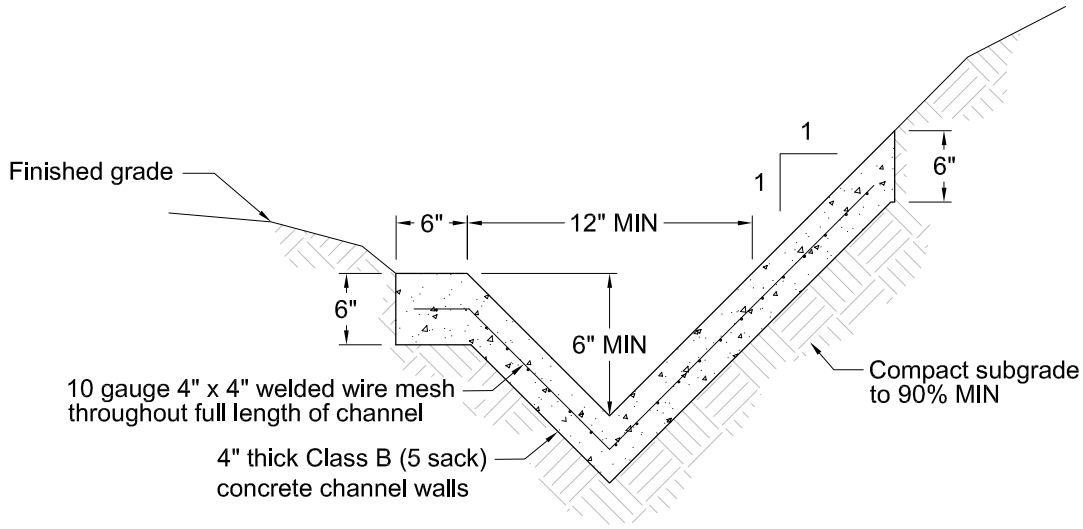

TYPE "A"

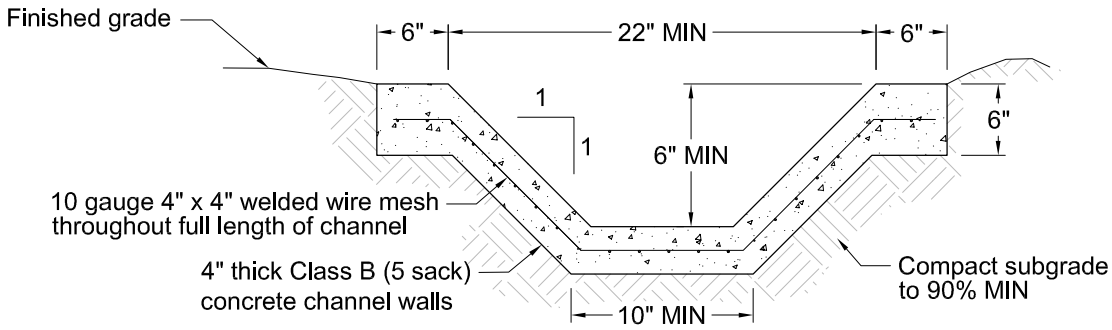

TYPE "B"

NOTES:

1. Forms shall be inspected by Public Works Inspector prior to placing concrete.
2. No ditch shall be constructed on filled ground prior to certification of the fill by the Soils Engineer.
3. Weakened plane joints shall be installed every 10', no expansion joints required.

APPROVED MATERIALS (see complete City Approved Materials List)**:**

1. Concrete shall be Class B (5 sack).

CITY OF HEALDSBURG CALIFORNIA SINCE 1867	DITCHES Concrete Lined			STANDARD DETAIL SD03
	SCALE: NONE	APPROVED: M.T. Kerr	DATE: 8/2008	

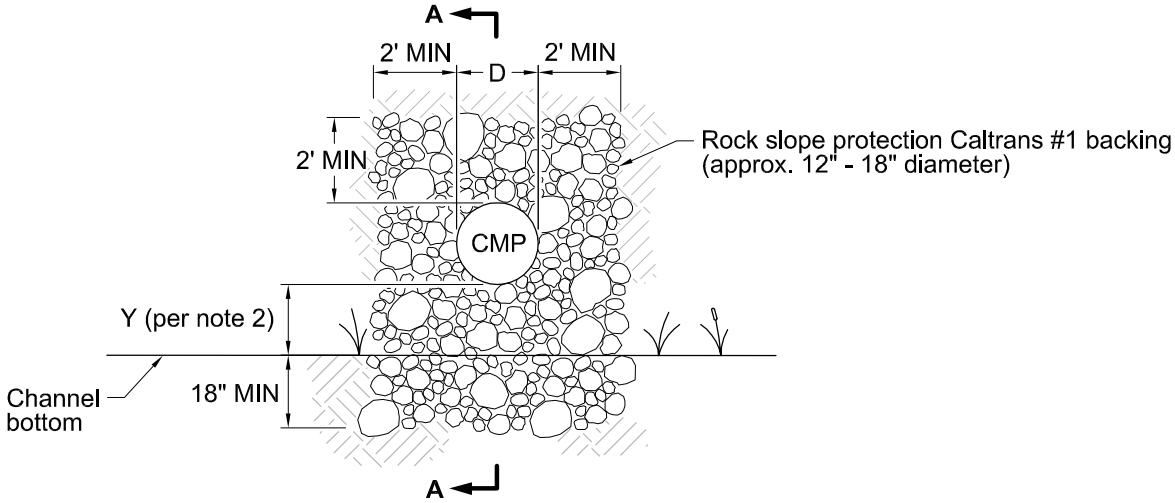

PROFILE

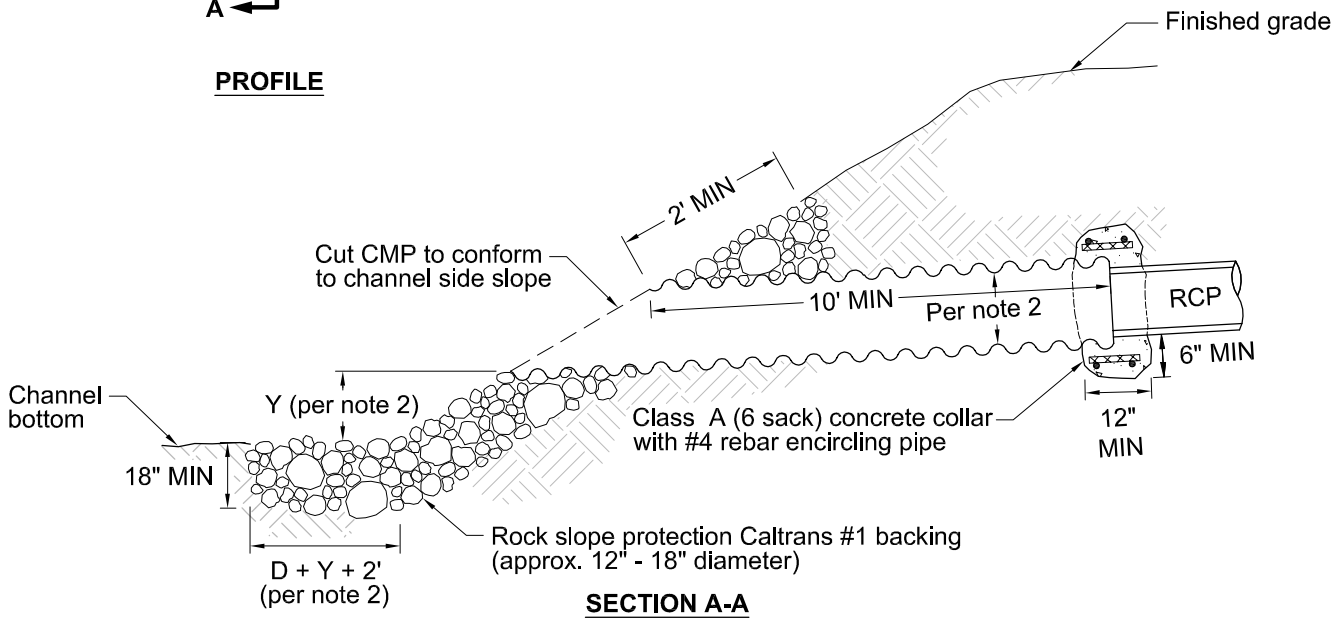

SECTION A-A

NOTES:

1. The last section of any storm drain that empties into a creek, stream, river or other waterway shall be corrugated metal pipe (CMP) sized one standard pipe size larger (i.e., use 24" CMP for 18" RCP).
2. Rock slope protection based on CMP pipe diameter (D):

   When D is 24" or larger, Y= 2'

   When D is smaller than 24", Y = 1'

CITY OF HEALDSBURG
CALIFORNIA
SINCE 1867

SCALE: NONE

APPROVED:

DATE: 8/2008

STORM DRAIN OUTFALL

STANDARD DETAIL

SD04

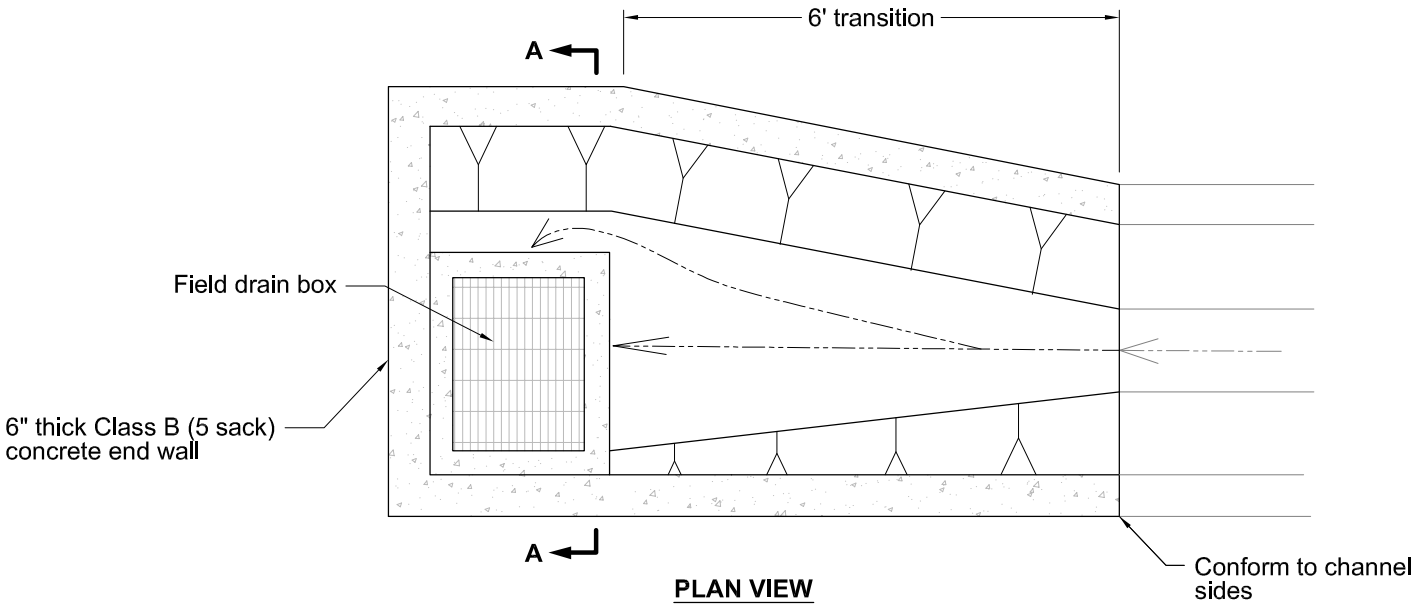

PLAN VIEW

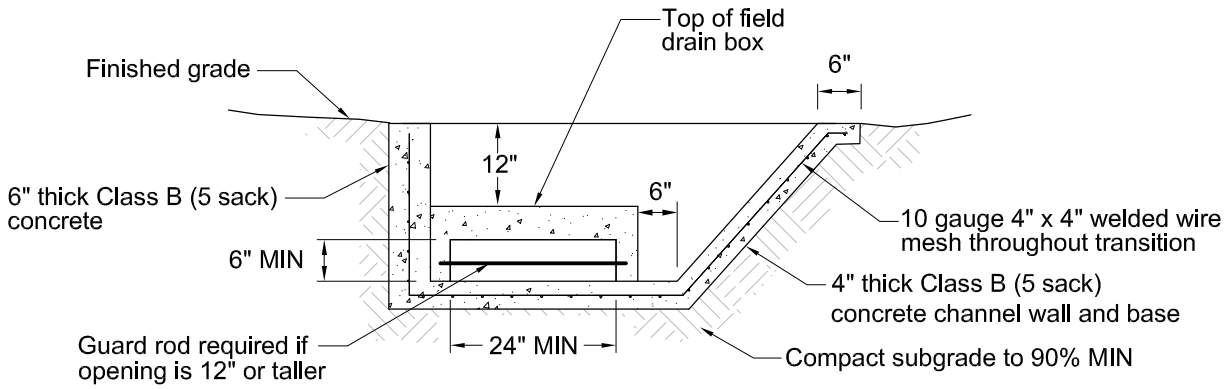

SECTION A-A

NOTES:

1. No structure shall be constructed on filled ground prior to certification of the fill by the Soils Engineer.
2. Forms shall be inspected by Public Works Inspector prior to placing concrete.
3. All sections shall be at least 4" thick.
4. Concrete finish shall conform to section 51-18A of the latest Caltrans specifications.

APPROVED MATERIALS (see complete list)**:**

1. Concrete shall be Class B (5 sack).
2. Field Drain: US Concrete Group 3K with two side openings and heavy locking grate.

CITY OF HEALDSBURG CALIFORNIA SINCE 1867	FIELD DRAIN Redundant Inlets			STANDARD DETAIL SD05
	SCALE: NONE	APPROVED: M.T. Kerr	DATE: 8/2008	

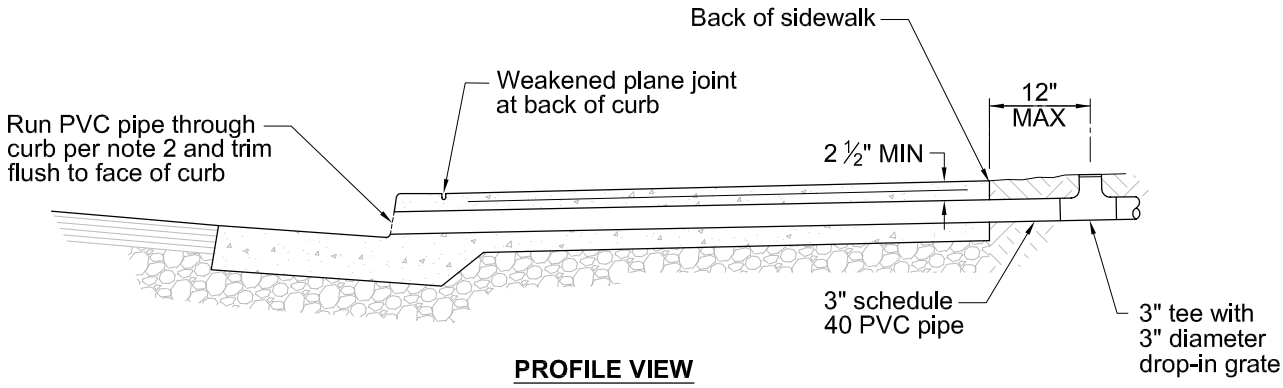

PROFILE VIEW

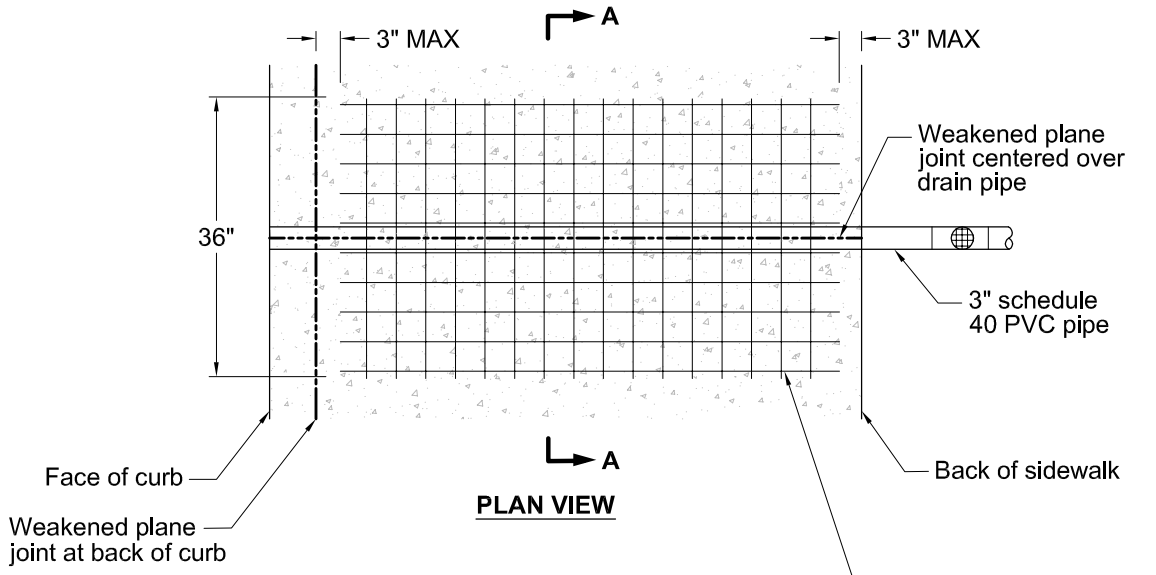

PLAN VIEW

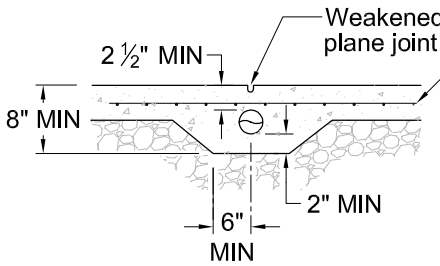

SECTION A-A

NOTES:

1. Sidewalk drains are required for all new construction (2 per lot recomended).
2. Core drilling of curb is required unless curb and gutter is replaced.

CITY OF HEALDSBURG CALIFORNIA SINCE 1867	SIDEWALK DRAIN			STANDARD DETAIL SD06
	SCALE: NONE	APPROVED: M.T. Kerr	DATE: 8/2008	

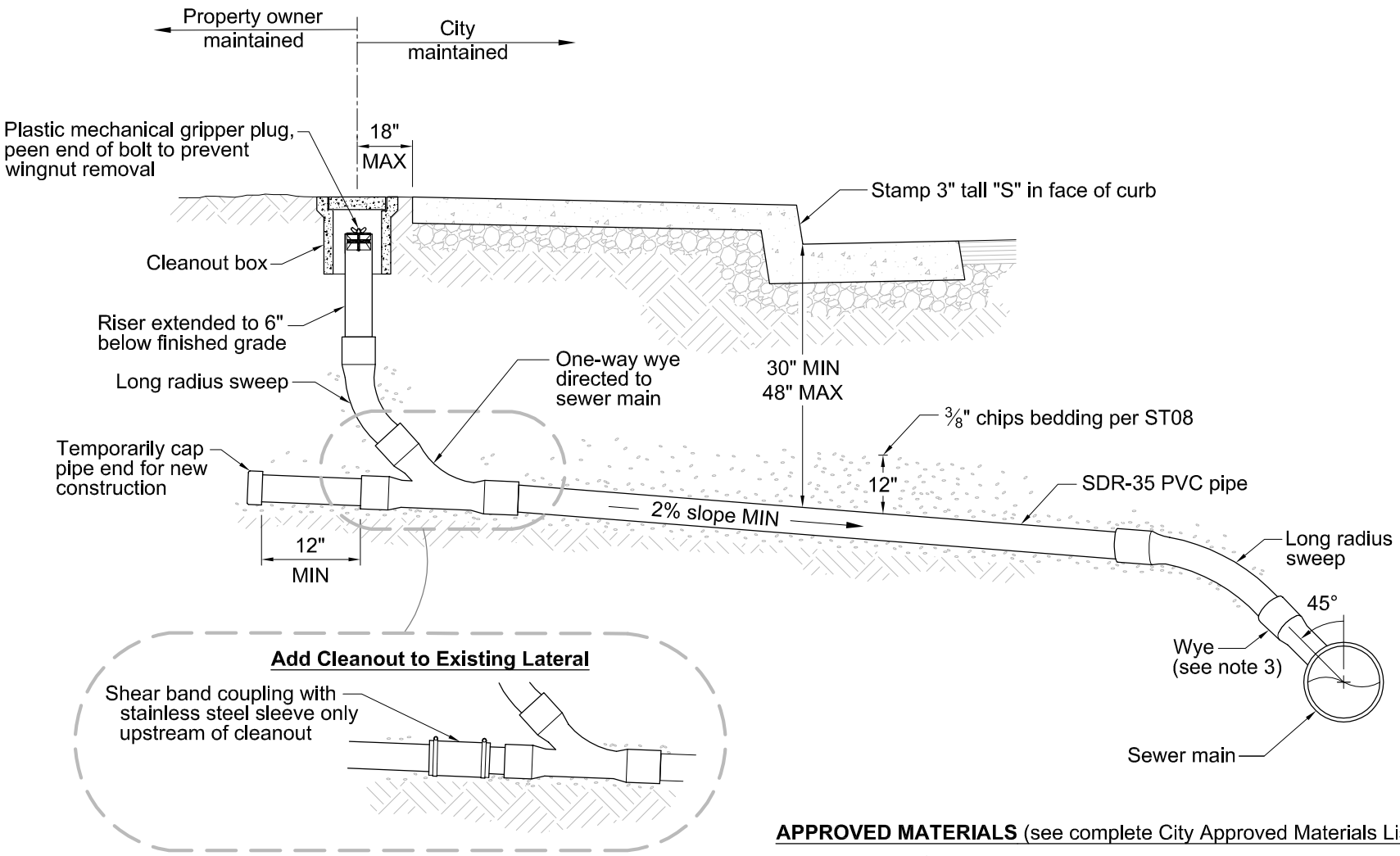

NOTES:

1. 5' MIN horizontal separation is required between sewer laterals and water services, water mains or fire hydrant lines.
2. 6" or larger laterals are required to be connected to the public sewer main at a manhole.
3. New laterals installed on existing public mains shall connect with a wye branch saddle with stainless steel band (tee is not allowed).
4. Cleanout components shall be the same size as the lateral.

APPROVED MATERIALS (see complete City Approved Materials List):

1. All pipe and fittings:
   a. Up to 8' deep - SDR 35 PVC
   b. Greater than 8' deep - SDR 26 PVC
2. Cleanout Box:
   a. Non-traffic bearing - Christy F8 box with F8D lid marked "SEWER"
   b. Traffic bearing - Christy G5 box with G5C lid marked "SEWER"
3. Plastic mechanical gripper plug:
   a. Cherne Industries end of pipe series, sized to fit (peen end of bolt to prevent wingnut removal)
4. Coupling (for adding cleanout to existing lateral only):
   a. Shear band coupling with stainless steel sleeve

CITY OF HEALDSBURG
CALIFORNIA
SINCE 1867

SCALE: NONE

APPROVED: M.P. Kim

DATE: 8/2008

SEWER LATERAL

STANDARD DETAIL

SS01

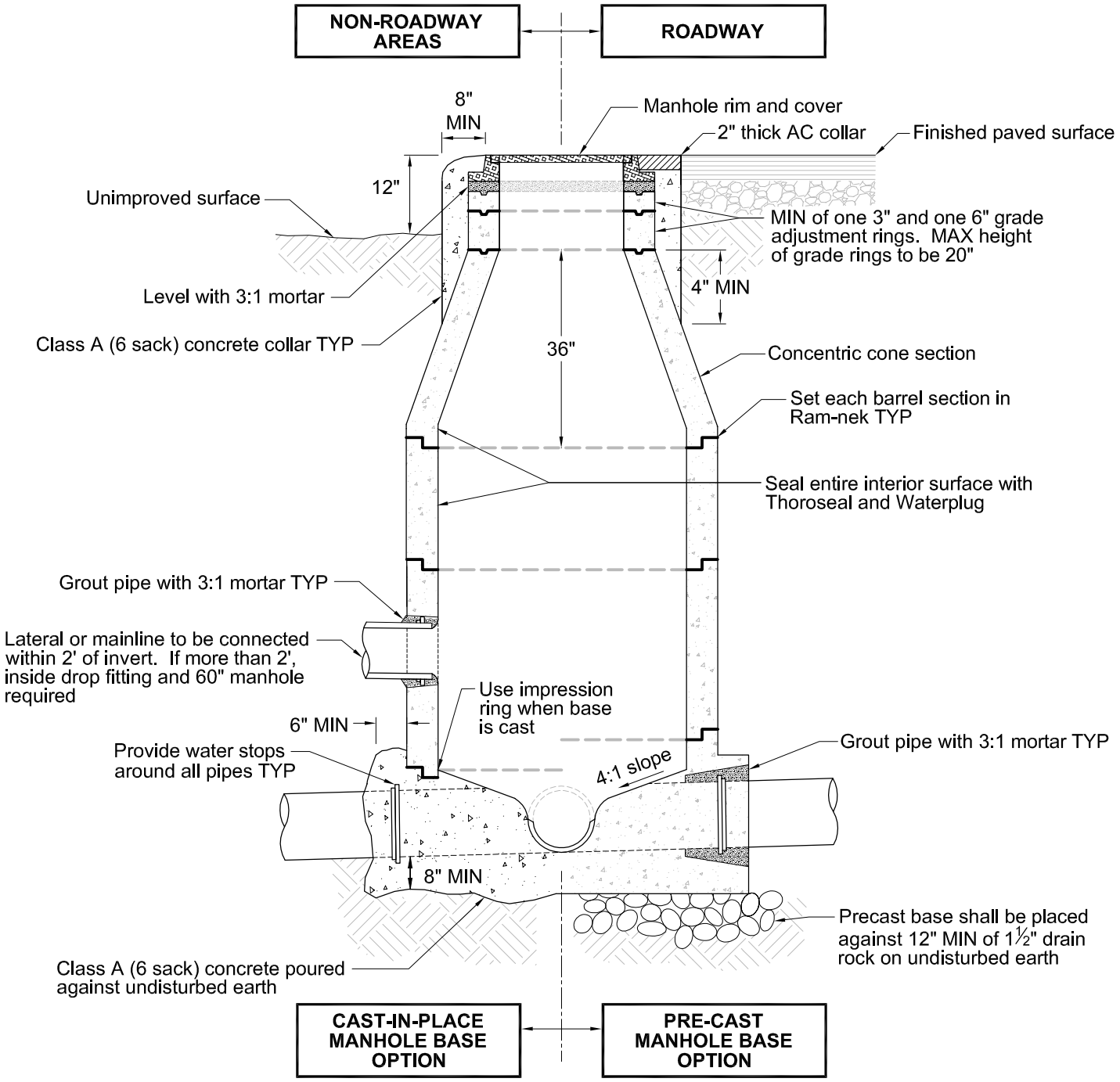

NOTES:

1. After lower ring section is set, break out top half of pipe (leave lower half of pipe in place) flush with inside face of manhole wall and construct shelf and U-shaped channel. Make elevation changes gradual and directional changes with smooth curves. Slope and size of channels shall match upstream and downstream pipes.
2. No steps are permitted in the manhole.
3. Bolt down lids with water tight gasket are required for manholes within 100' of a waterway where an overflow could discharge directly into the waterway.

APPROVED MATERIALS (see complete list)**:**

1. Manhole Structure:
   a. Pipe smaller than 18" - US Concrete Group 20-48C
   b. 18" to 48" pipe - US Concrete Group 20-60CC
2. Frame and Cover (marked "SANITARY SEWER" with closed pick hole):
   a. South Bay Foundry 1900 CPH
   b. D&L Supply A-1024 CPH

CITY OF HEALDSBURG
CALIFORNIA SINCE 1867

SEWER MANHOLE

STANDARD DETAIL

SS02

SCALE:	APPROVED:	DATE:
NONE	M.T. Kerr	8/2008

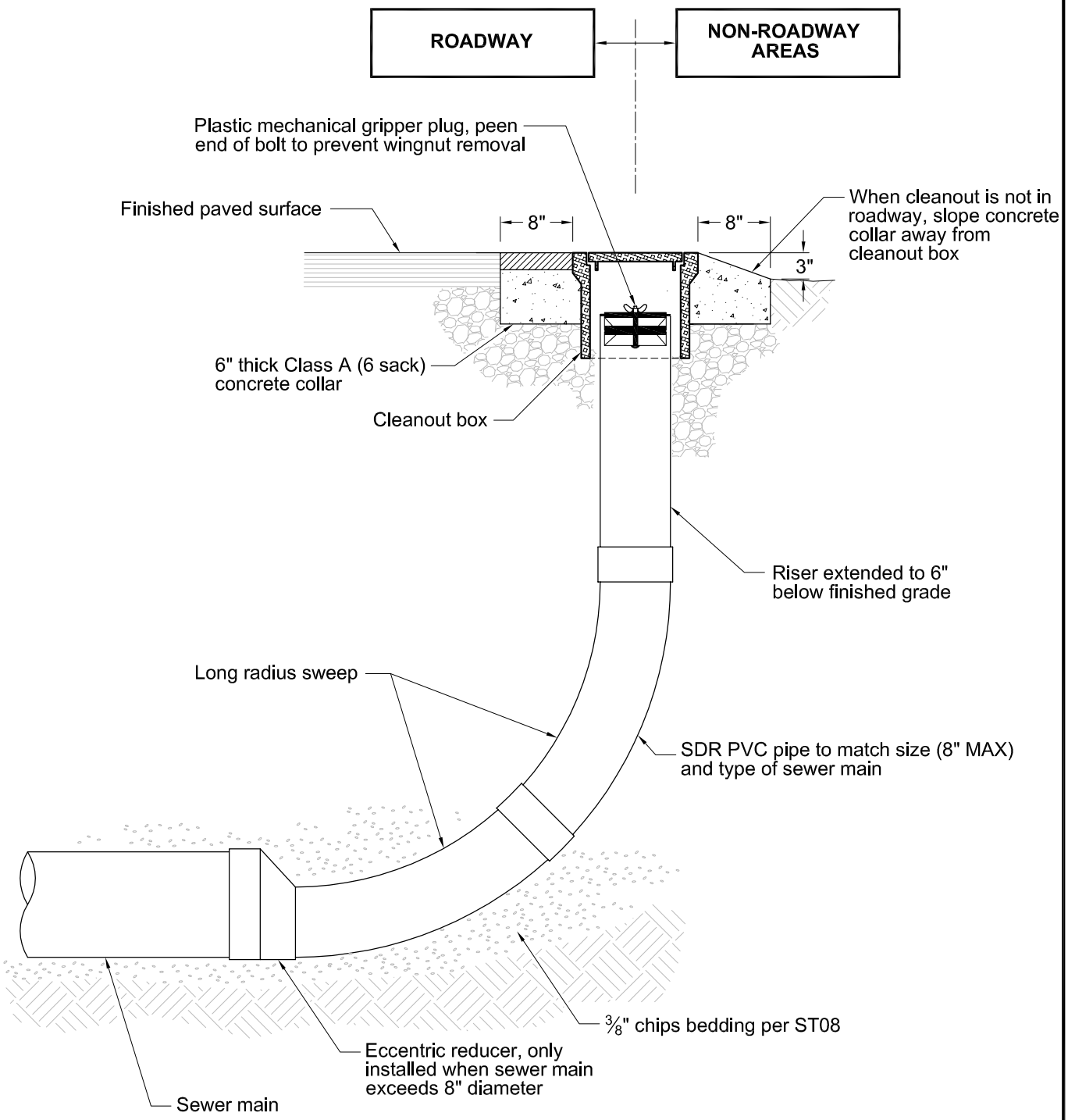

NOTES:

1. Mainline cleanout is allowed only where the sewer main is subject to future extension.

APPROVED MATERIALS (see complete list)**:**

1. All pipe and fittings shall match the size and type of sewer main
2. Cleanout Box: Christy G5 box with G5C lid marked "SEWER"
3. Plastic mechanical gripper plug:
   a. Cherne Industries end of pipe series, sized to fit (peen end of bolt to prevent wingnut removal)

CITY OF HEALDSBURG CALIFORNIA SINCE 1867	Temporary Mainline Cleanout		STANDARD DETAIL SS03
	SCALE: NONE	APPROVED: M.T. Kim	DATE: 8/2008