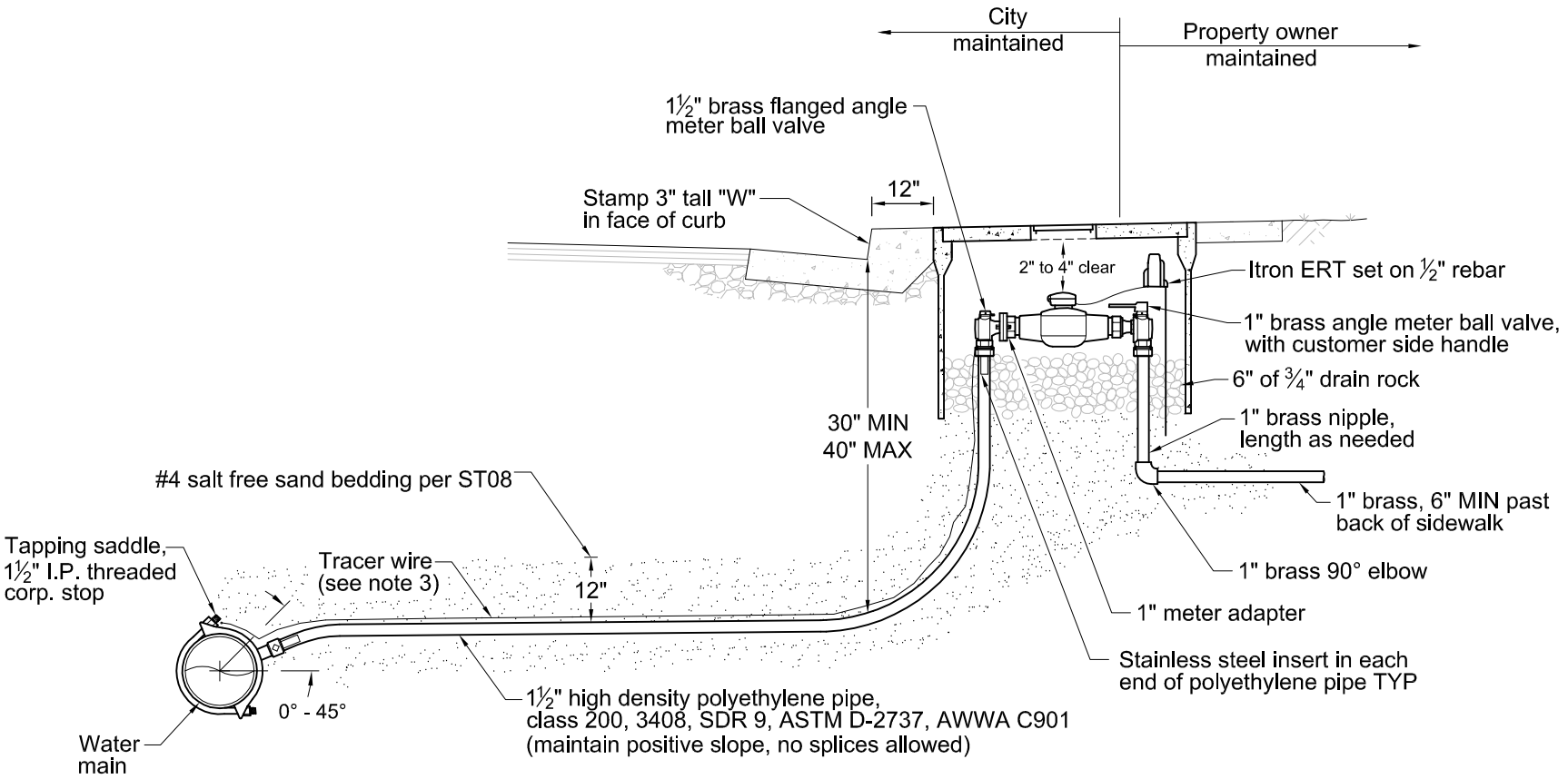

NOTES:

1. Connections to the water main:
   a. 5' MIN horizontal separation from sewer laterals.
   b. 2' MIN separation from an adjacent tap or mainline joint.
2. Boring or trenching under curb, gutter, or sidewalk for installation or repair is prohibited.
3. Copper tracer wire (10 gauge insulated solid wire) shall be taped to pipe at 4' intervals and run continuous from the water main and terminate in the meter box.
4. Prior to backfilling, the entire water service line is required to be inspected by the City Inspector Any portion of the service line or fittings not inspected or damaged will not be accepted.
5. Entire water service line is required to be leak free under pressure.
6. Water meter and Itron ERT to be furnished and installed by contractor.

APPROVED MATERIALS (see complete City Approved Materials List):

1. Water Meter: 1" Badger model 70 with Itron ERT and model 60WP Itron ERT
2. Meter Box:
   a. Non-traffic bearing - Christy B30 with B30E reading lid marked "WATER"
   b. Traffic bearing - Christy B1324 with B61GH reading lid marked "WATER"

CITY OF HEALDSBURG
CALIFORNIA
SINCE 1867

WATER SERVICE

1" Meter

SCALE: NONE

APPROVED: M.T. Kunz

DATE: 8/2008

STANDARD DETAIL

WL01

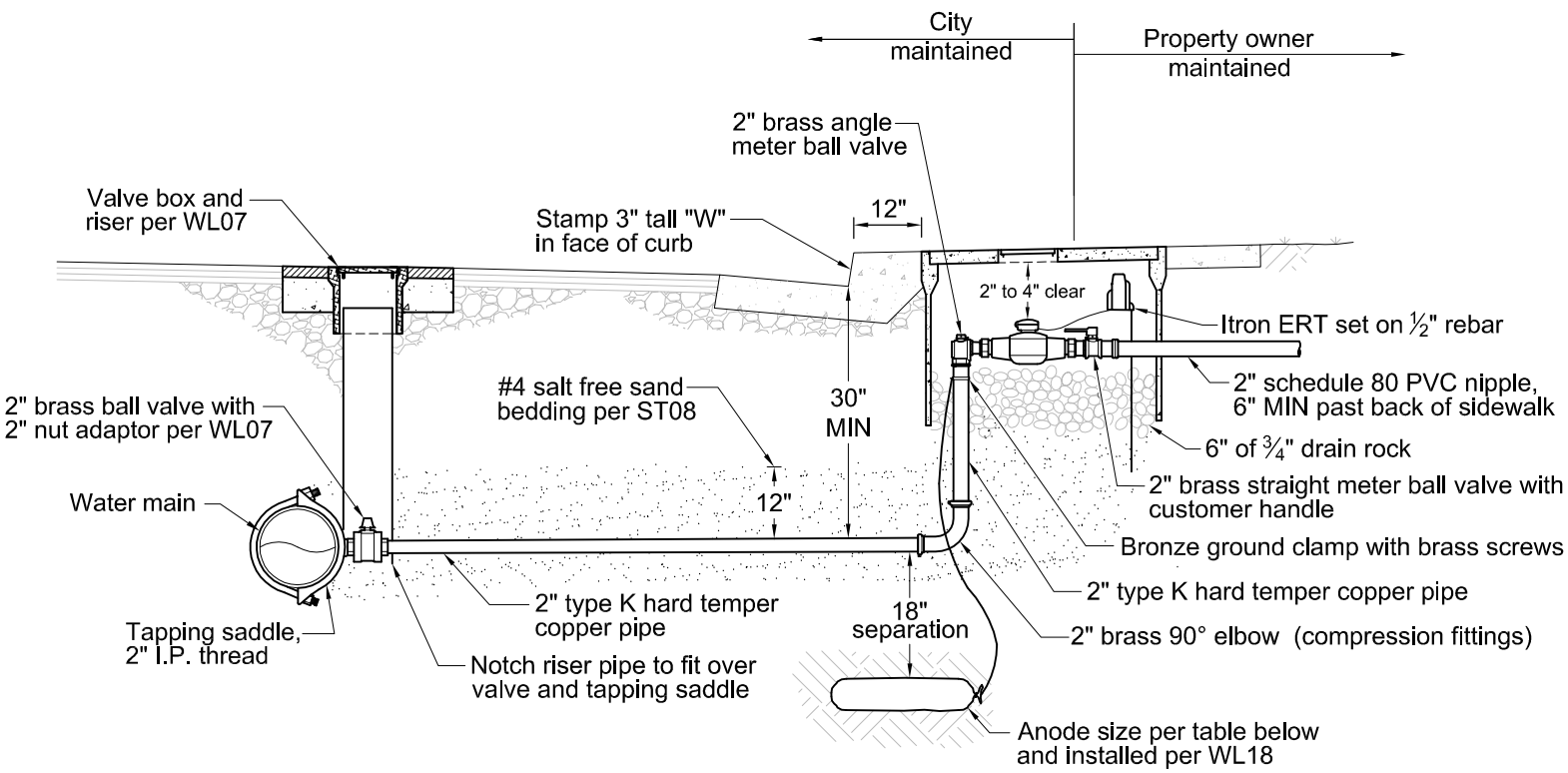

NOTES:

1. Connections to the water main:
   a. 5' MIN horizontal separation from sewer laterals.
   b. 2' MIN separation from an adjacent tap or mainline joint.
2. Boring or trenching under curb, gutter, or sidewalk for installation or repair is prohibited.
3. If more than a full length of pipe is required, a compression coupling shall be used.
4. Prior to backfilling, the entire water service line is required to be inspected by the City Inspector. Any portion of the service line or fittings not inspected or damaged will not be accepted.
5. Entire water service line is required to be leak free under pressure.
6. Water meter and Itron ERT to be furnished and installed by contractor.

APPROVED MATERIALS (see complete City Approved Materials List):

1. Water Meter:
   a. 1½" model 120 Badger with Itron model 60WP ERT
   b. 2" model 170 Badger with Itron model 60WP ERT
2. Meter Box:
   a. Non-traffic bearing - Christy B36 with B36E reading lid marked "WATER"
   b. Traffic bearing - Christy B1730 with B51GH reading lid marked "WATER"
3. Anode (high potential magnesium, bagged) for cathodic protection:

Length of 2" Copper Tubing	Size of Anode(s)
1' - 15'	17 lbs.
16' - 30'	32 lbs.
31' - 50'	60 lbs.
51' - 100'	(2) - 60 lbs.

CITY OF HEALDSBURG CALIFORNIA SINCE 1867

WATER SERVICE
1½" and 2" Meters

SCALE: NONE

APPROVED:

DATE: 8/2008

STANDARD DETAIL

WL02

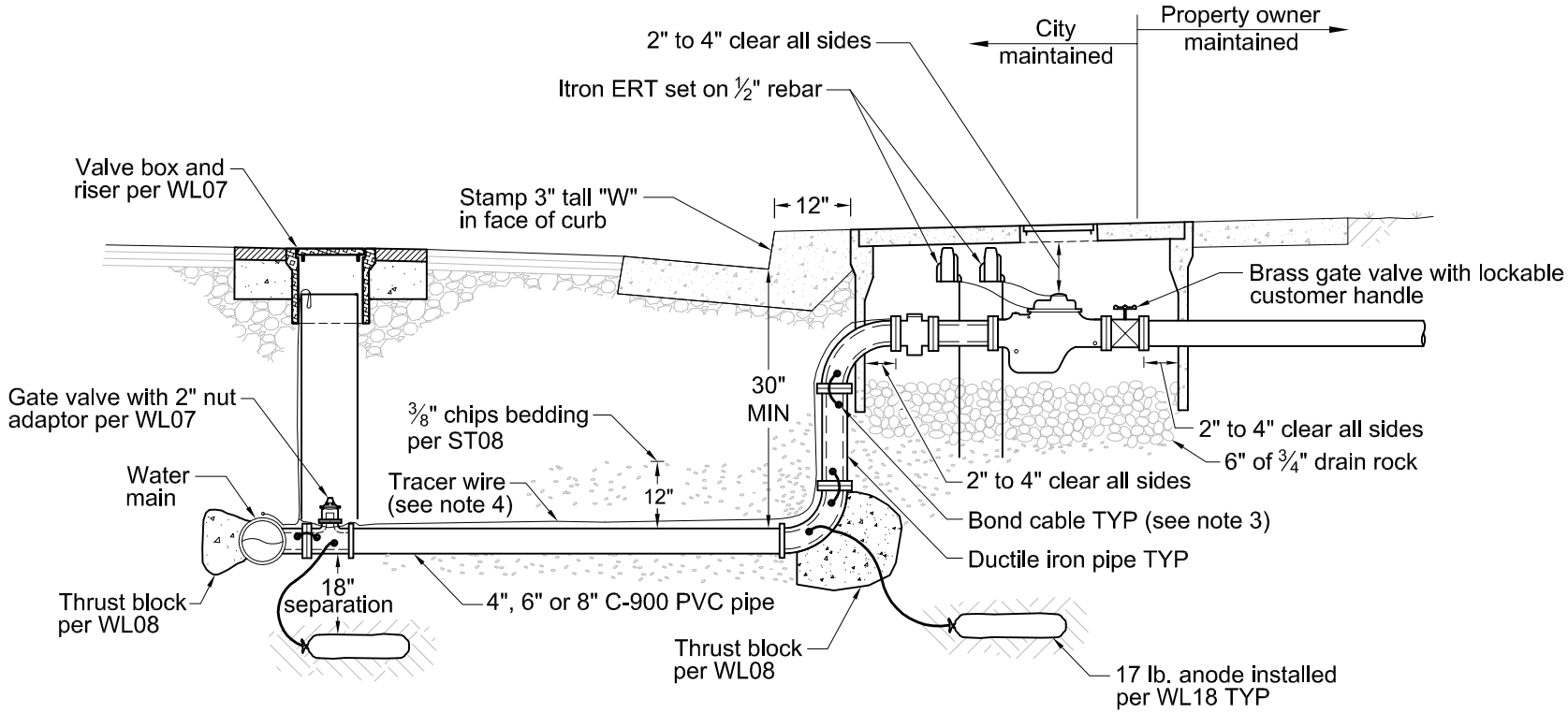

NOTES:

1. Connections to the water main:
   a. 5' MIN horizontal separation from sewer laterals.
   b. 2' MIN separation from an adjacent tap or mainline joint.
   c. Connection to water main shall be with a flanged tee, except where the service size is not more than half the diameter of the main, a tapping saddle may be used.
2. Boring or trenching under curb, gutter or sidewalk for installation or repair is prohibited.
3. All metallic fittings and sections of pipe shall be bonded together with an 8 gauge solid copper bond cable (black HMWPE insulation), welded per WL19 to ensure continuity.
4. Copper tracer wire (10 gauge insulated solid wire) shall be taped to pipe at 4' intervals and run continuous from the water main and terminate in the meter box.
5. Bypass line may be required by the City Engineer for critical facilities.
6. Prior to backfilling, the entire water service line is required to be inspected by the City Inspector. Any portion of the service line or fittings not inspected or damaged will not be accepted.
7. Entire water service line is required to be leak free under pressure.
8. Water meter, plate strainer and Itron ERT to be furnished and installed by contractor.

APPROVED MATERIALS (see complete City Approved Materials List):

1. Water Meter: 4", 6", or 8" Badger compound series meter with bronze plate strainer, (2) Itron model 60WP ERT's
2. Meter Box:
   a. Non-traffic bearing - Christy concrete box with reading lid marked WATER", sized to fit
   b. Traffic bearing - Christy concrete H20 loading box with reading lid marked "WATER", sized to fit

WATER SERVICE
4", 6" and 8" Meters

SCALE: NONE

APPROVED:

DATE: 8/2008

STANDARD DETAIL

WL03

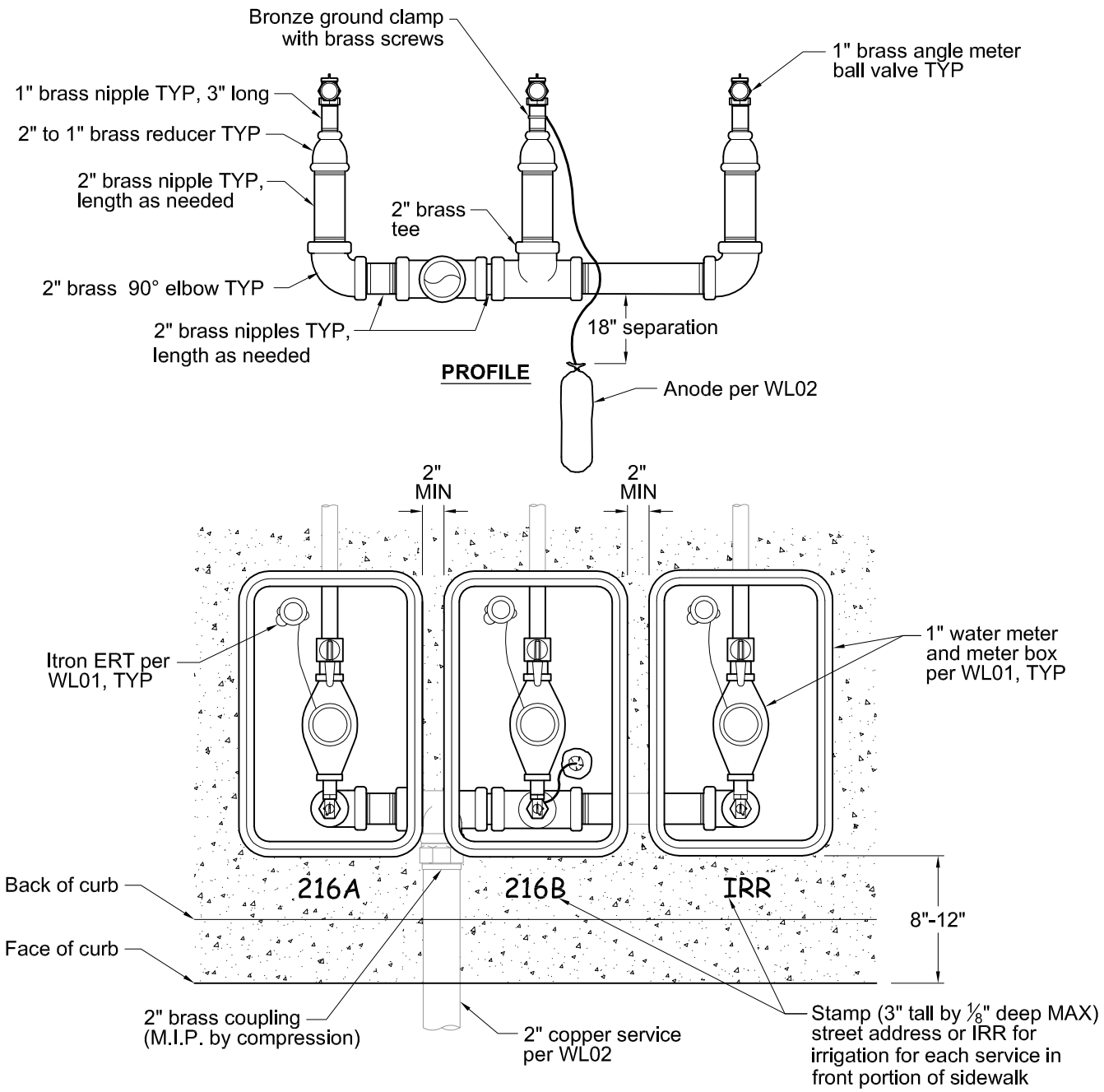

NOTES:

1. Up to four 1" meters may be manifolded off of a 2" copper service line.
2. Fire services shall not be manifolded off of water services.
3. Manifolds larger than 2" require written approval by the City Engineer.
4. Fittings used in the manifold assembly shall be solid brass, no copper fittings shall be used.
5. Prior to backfilling, the entire water service line and manifold is required to be inspected by the City Inspector and to be leak free under pressure. Any portion of the service line, manifold or fittings not inspected or damaged will not be accepted.
6. Brass manifold shall be bedded in #4 salt free sand per ST08.

CITY OF HEALDSBURG CALIFORNIA SINCE 1867	WATER SERVICE Manifold Multiple Meters off 2" Service		STANDARD DETAIL WL04
	SCALE: NONE	APPROVED: M.T. Kerr	DATE: 8/2008

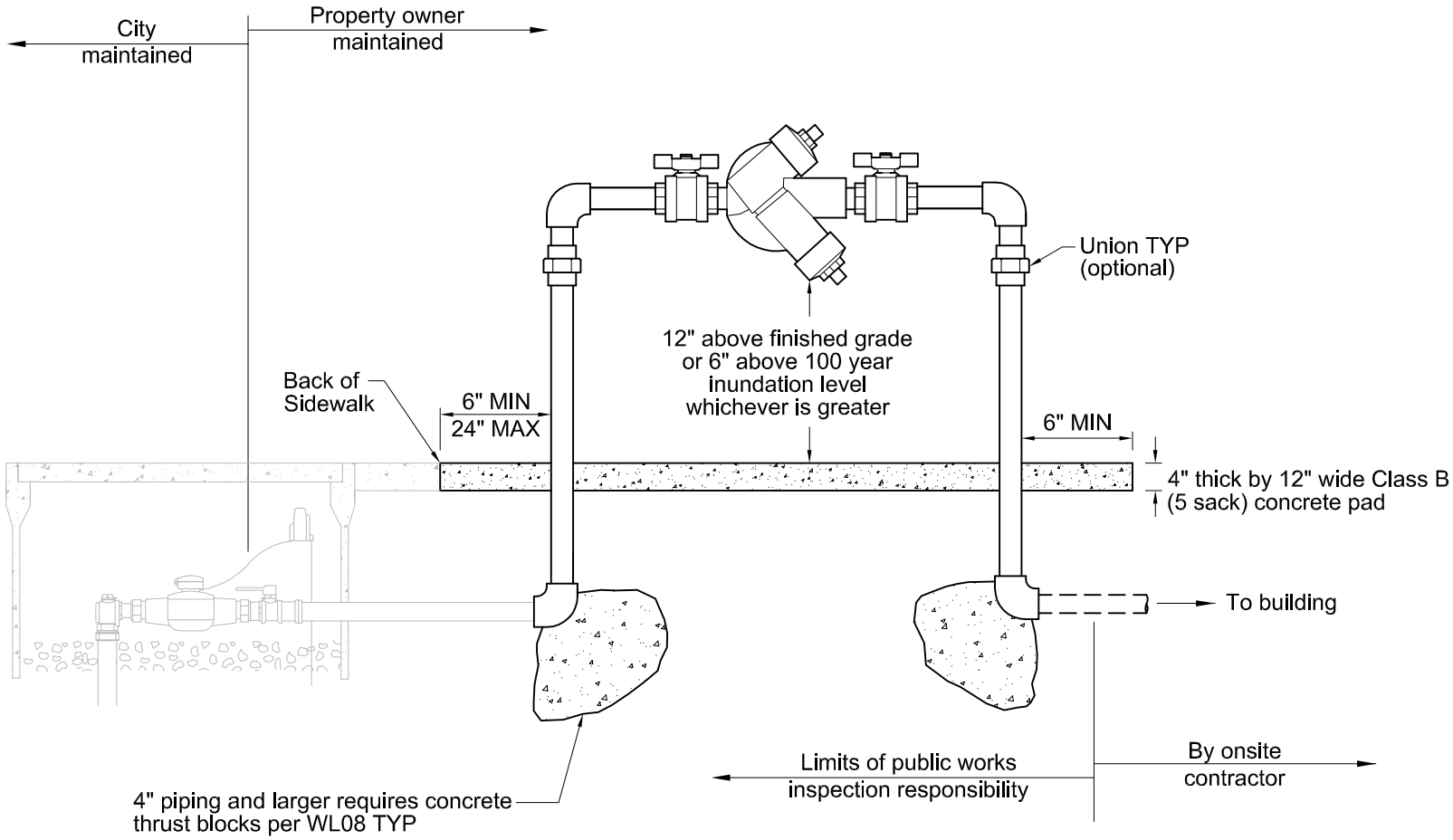

NOTES:

1. Connections or tees between the water meter and the backflow assembly are prohibited.
2. Backflow assemblies shall not be closer than 5' to a driveway, parking space, etc. and shall allow sufficient room for maintenance and testing of the backflow assembly.
3. Backflow assemblies shall be tested in place for the initial installation and on an annual basis thereafter. Test report shall be provided to the Public Works Department prior to acceptance. A list of recognized testers is available from the Public Works Department.

APPROVED MATERIALS (see complete list):

1. Piping and fittings:
   a. 3" and smaller assemblies - threaded brass, type "K" hard-tempered copper or galvanized pipe
   b. 4" and larger assemblies - flanged ductile iron
2. Reduced pressure backflow assemblies appearing on "List of Approved Backflow Prevention Devices" (latest edition) by the University of Southern California Foundation for Cross Connection Control and Hydraulic Research.
3. Freeze protection is recommended and shall be a commercially available insulated blanket with green weather resistant outer covering locked in place.

BACKFLOW ASSEMBLY

Reduced Pressure

SCALE: NONE

APPROVED: M.T. Kim

DATE: 8/2008

STANDARD DETAIL

WL05

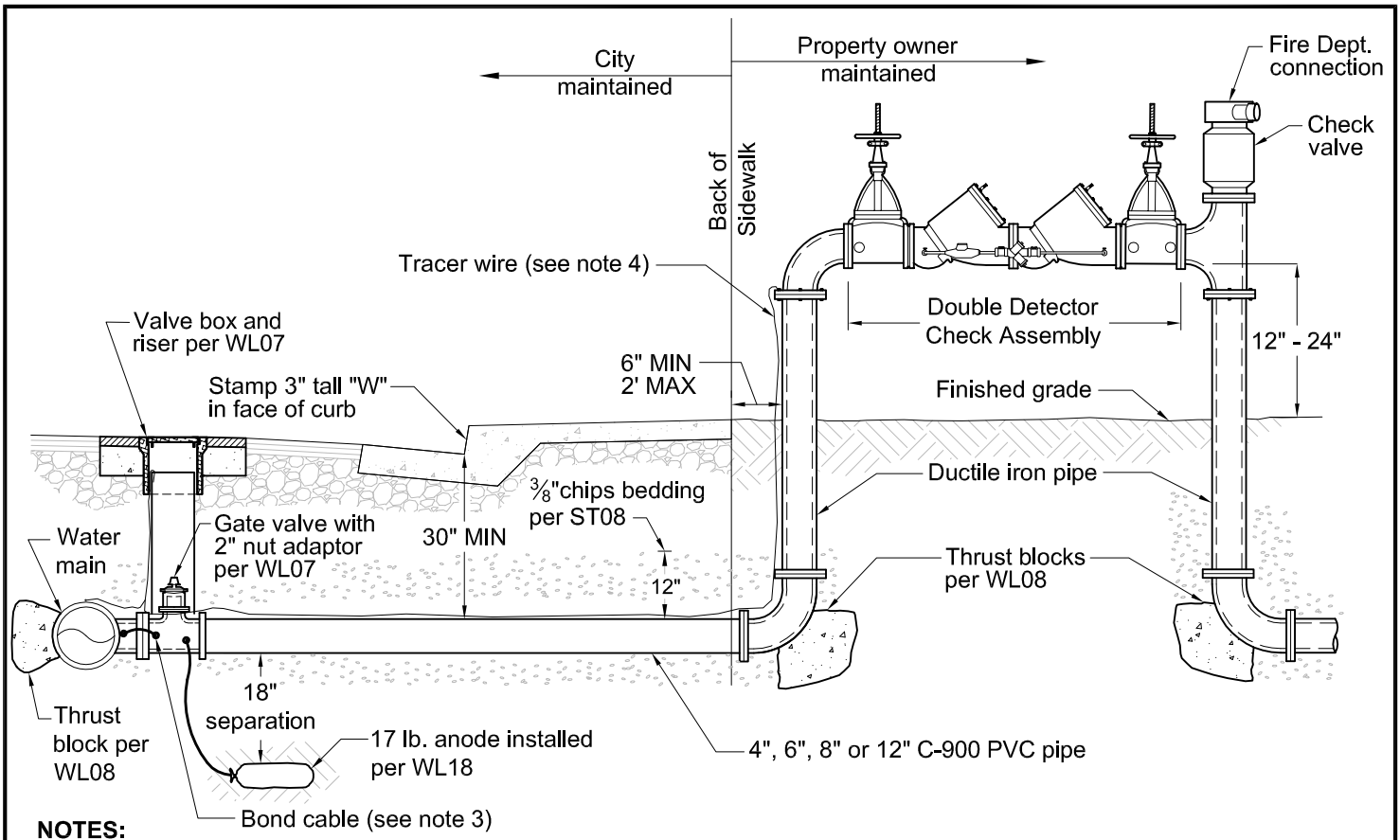

NOTES:

1. Backflow Assembly Requirements:
   a. Located no closer than 5' to a driveway, parking space, etc. and allow sufficient room for maintenance and testing.
   b. Tested in place for the initial installation and on an annual basis thereafter. Test report shall be provided to the Public Works Department prior to acceptance. A list of approved testers is available from the Public Works Department.
   c. Tamper switches, freeze protection and similar objects shall be installed to allow for access to test cocks for testing and maintenance of the assembly.
   d. Valve handles on bypass assembly shall be removed.
2. Connection Requirements:
   a. Connection to water main shall be with a flanged tee, except where the service size is not more than half the diameter of the main, a tapping saddle may be used.
   b. Connections or tees between the water main and the backflow assembly are prohibited.
3. All metallic fittings and sections of pipe shall be bonded together with an 8 gauge solid copper bond cable (black HMWPE insulation), welded per WL19 to ensure continuity.
4. Copper tracer wire (10 gauge insulated solid wire) shall run continuous from the water main, loop up into the valve box and terminate above grade at a bolted connection on the backflow assembly.
5. Fire Department Requirements:
   a. Fire Dept. connection shall be easily accessible without interference from shut off valves or adjacent objects.
   b. Shut off valves shall be resilient wedge OS&Y, pad locked in open position with tamper switches and monitoring station as approved by the City Fire Department.

APPROVED MATERIALS (See complete City Approved Materials List)**:**

1. Backflow Assembly (unit includes paired Badger bypass meter with separate double check backflow assembly):
   a. Backflow assemblies for use in fire services appearing on "List of Approved Back Flow Prevention Devices" (latest edition) by the University of Southern California Foundation for Cross Connection Control and Hydraulic Research.
2. Freeze protection is recommended (most critically over the bypass meter and double check assembly) and shall be a commercially available insulated blanket with green weather resistant outer covering locked in place. Other covers or screening require written approval of the City Engineer.

CITY OF HEALDSBURG
CALIFORNIA SINCE 1867

BACKFLOW ASSEMBLY

Fire Service Double Detector Check

STANDARD DETAIL

WL06

SCALE:	APPROVED:	DATE:
NONE	M.T. Kerr	8/2008

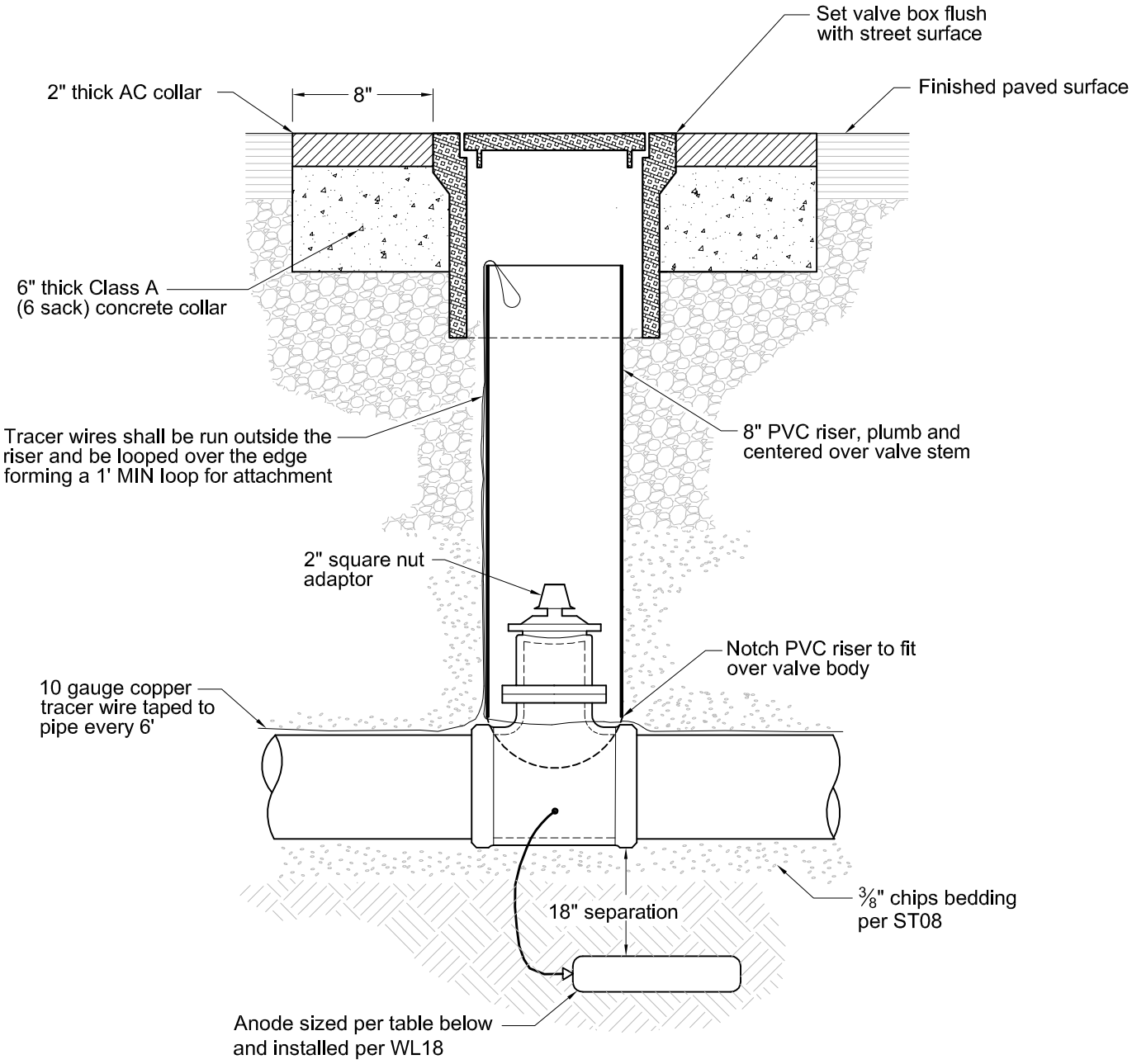

APPROVED MATERIALS (see complete City Approved Materials List)**:**

1. Valve:
   a. 2" brass ball valve
   b. 4", 6", 8", and 12" resilient wedge gate valve
2. Valve Box: Christy G5 box with G5C lid marked "WATER"
3. 2" Square Nut Adaptor: Ford QT-67, McDonald 6122 or Mueller B20299
4. Anode (high potential magnesium, bagged) for cathodic protection, see table to right.

Valve Size	Size of Anode
2"- 6"	9 lbs.
8"- 12"	17 lbs.

CITY OF HEALDSBURG
CALIFORNIA SINCE 1867

VALVE

STANDARD DETAIL

WL07

SCALE: NONE

APPROVED: M.T. Kim

DATE: 8/2008

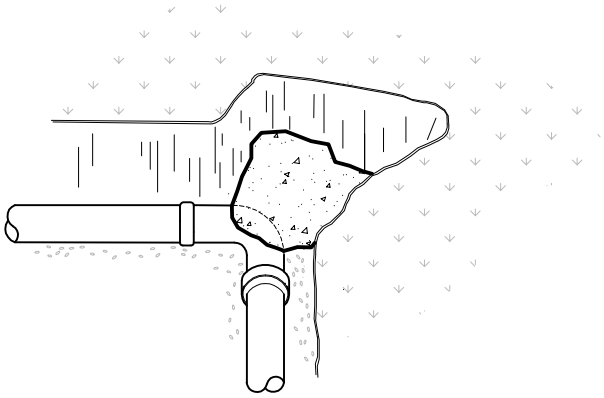

BEND

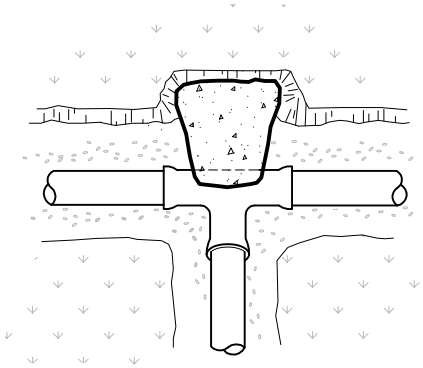

TEE

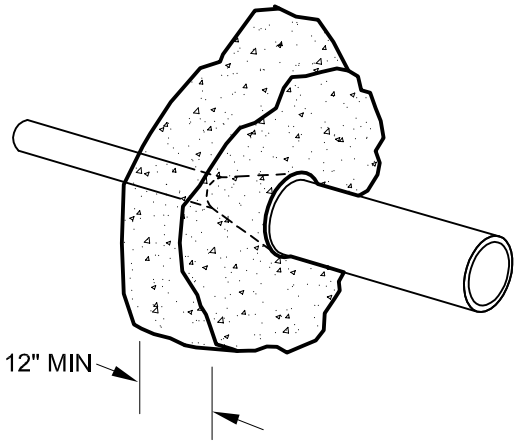

REDUCER

NOTES:

1. Table of thrust block dimensions at right are calculated for soil bearing capacity of 2,000 lbs. per sq-ft. The Consulting Engineer shall specify thrust blocking requirements for all other soil bearing conditions.
2. Safe bearing load of soil for horizontal thrust shall not be exceeded. Concrete blocking, cast in place, shall extend from bells of pipe to undisturbed ground. Concrete shall not be placed on or around nuts and bolts.
3. For plugged leg(s) of tee or cross use concrete blocking indicated in table to the right. Other additional concrete thrust blocking may be required by City Engineer.
4. Prior to placement of concrete, all fittings in contact with concrete shall be wrapped with poly wrap.

APPROVED MATERIALS (see complete City Approved Materials List)**:**

1. Concrete shall be Class B (5 sack). For small amounts a U-cart with rotating drum from a certified plant may be used (no hand mix).

Pipe Diameter	Minimum bearing area required (see note 1)				
	90° Bend	45° Bend	22 ½° Bend	Tee	Reducer
4"	3 sq-ft	2 sq-ft	1 sq-ft	2 sq-ft	2 sq-ft
6"	6 sq-ft	3 sq-ft	2 sq-ft	4 sq-ft	3 sq-ft
8"	9 sq-ft	5 sq-ft	3 sq-ft	7 sq-ft	4.5 sq-ft
10"	15 sq-ft	8 sq-ft	4 sq-ft	11 sq-ft	8 sq-ft
12"	22 sq-ft	10 sq-ft	6 sq-ft	15 sq-ft	11 sq-ft

CITY OF HEALDSBURG
CALIFORNIA
SINCE 1867

SCALE: NONE

APPROVED:

DATE: 8/2008

THRUST BLOCKING

WL08

STANDARD DETAIL

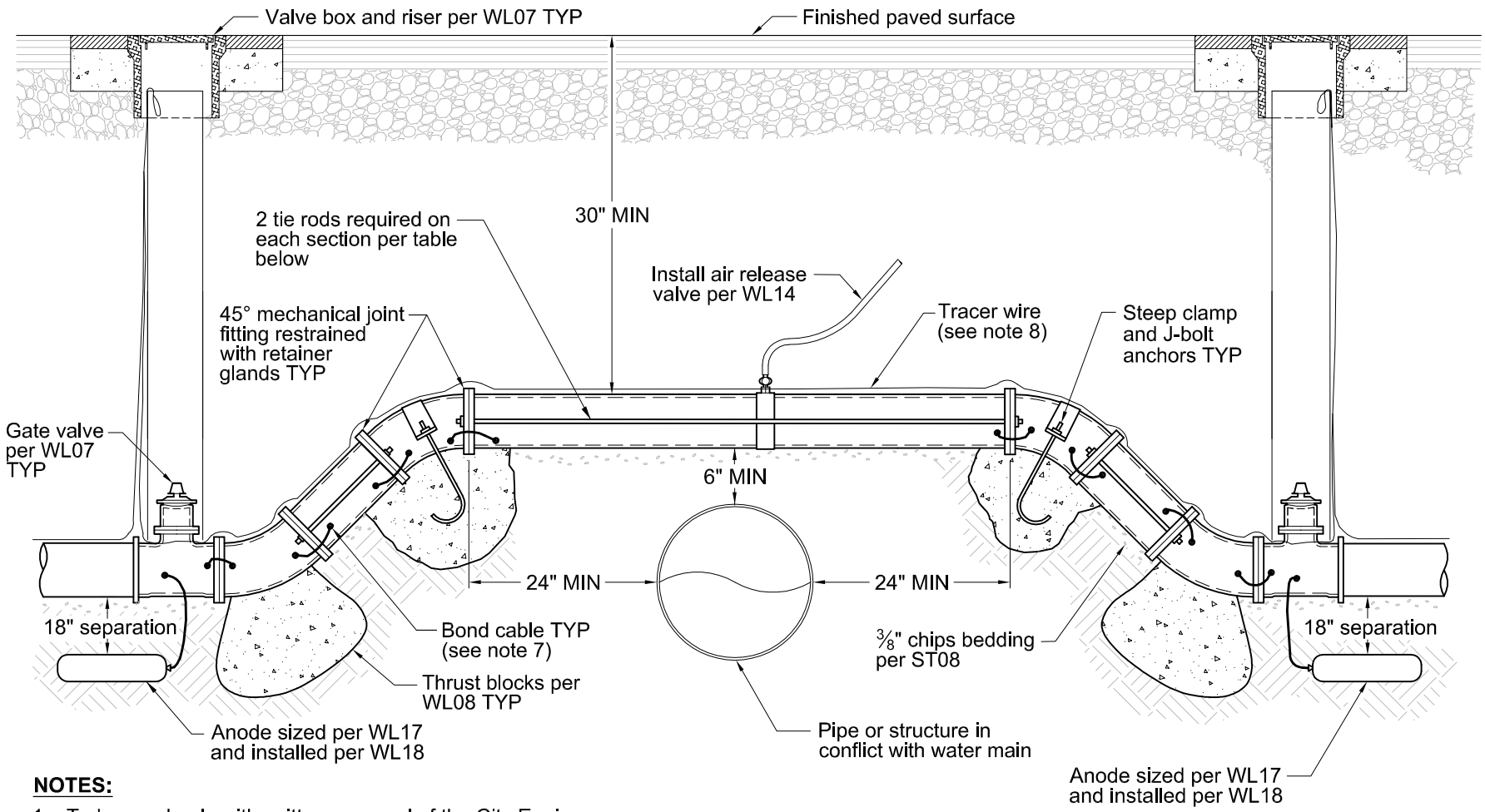

NOTES:

1. To be used only with written approval of the City Engineer.
2. All pipe and fittings in the crossing shall be ductile iron.
3. All hardware (nuts, bolts, tie rods, etc.) on underground fittings shall be stainless steel.
4. All joints shall be flanged or mechanical joint restrained.
5. All bends shall be 45° or less (90° bends prohibited).
6. All exposed threads shall be painted with an approved bituminous coating after nuts are tightened.
7. All fittings and sections of pipe shall be bonded together with an 8 gauge solid copper bond cable (black HWMPE insulation), welded per WL19 to insure continuity.
8. Copper tracer wire (10 gauge insulated solid wire) shall be taped to pipe at 4' intervals and run continuous along the water main crossing.
9. Wrap pipe in 8 mil low density polyethylene.

Pipe Diameter	Tie Rod Diameter
6"	5/8"
8"	3/4"
12"	1 1/8"

CITY OF HEALDSBURG
CALIFORNIA
SINCE 1867

WATER MAIN CROSSING

Over A Structure

SCALE: NONE

APPROVED:

DATE: 8/2008

STANDARD DETAIL

WL09

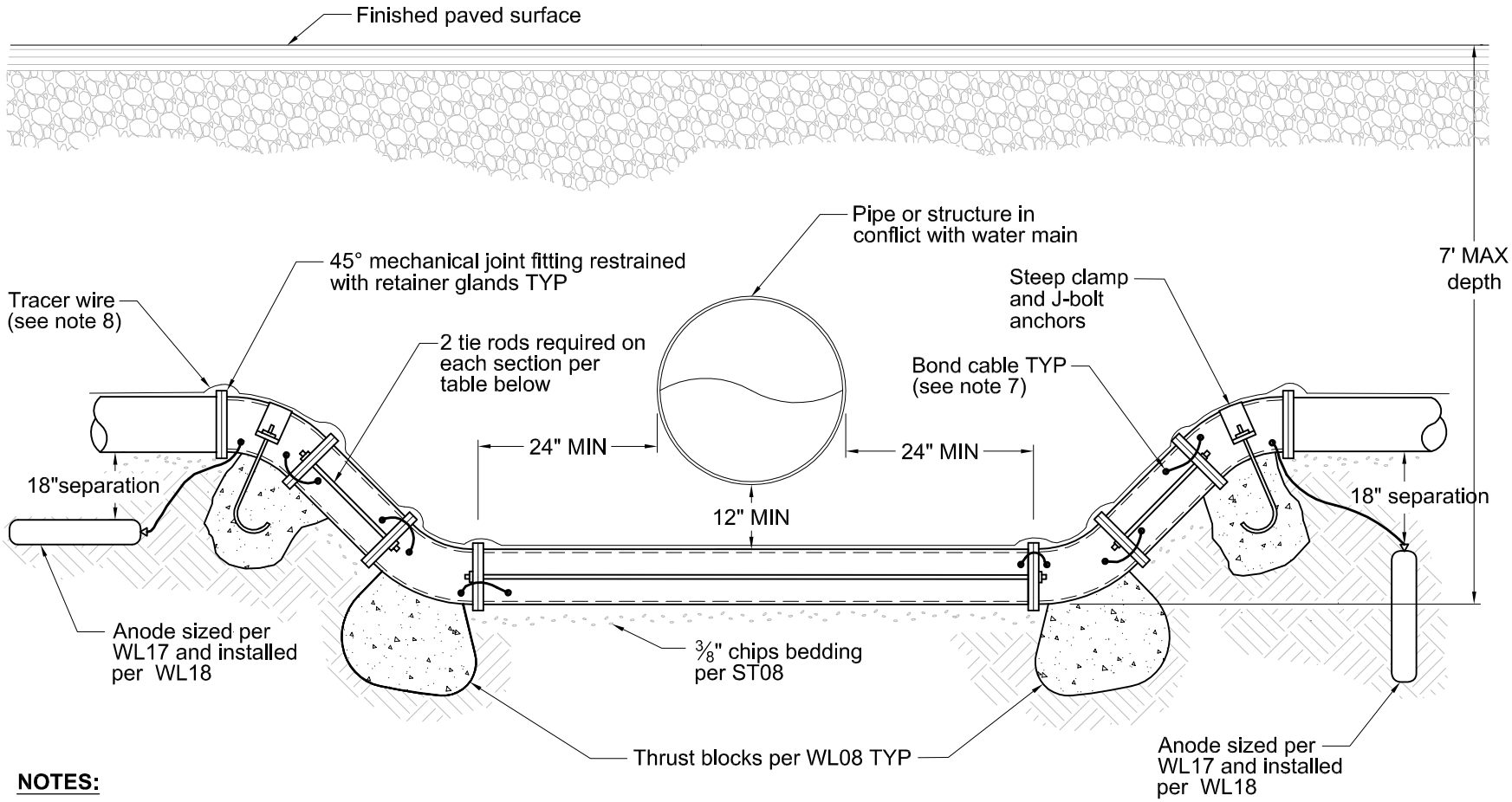

NOTES:

1. To be used only with written approval of the City Engineer.
2. All pipe and fittings in the crossing shall be ductile iron.
3. All hardware (nuts, bolts, tie rods, etc.) on underground fittings shall be stainless steel.
4. All joints shall be flanged or mechanical joint fittings with retainer glands.
5. All bends shall be 45° or less (90° bends prohibited).
6. All exposed threads shall be painted with an approved bituminous coating after nuts are tightened.
7. All fittings and sections of pipe shall be bonded together with an 8 gauge solid copper bond cable (black HWMPE insulation), welded per WL19 to insure continuity.
8. Copper tracer wire (10 gauge insulated solid wire) shall be taped to pipe at 4' intervals and run continuous along the water main crossing and loop up into the valve boxes.
9. Wrap pipe in 8 mil low density polyethylene.

Pipe Diameter	Tie Rod Diameter
6"	5/8"
8"	3/4"
12"	1 1/8"

CITY OF HEALDSBURG
CALIFORNIA
SINCE 1867

WATER MAIN CROSSING
Under A Structure

SCALE: NONE

APPROVED:

DATE: 8/2008

STANDARD DETAIL

WL10

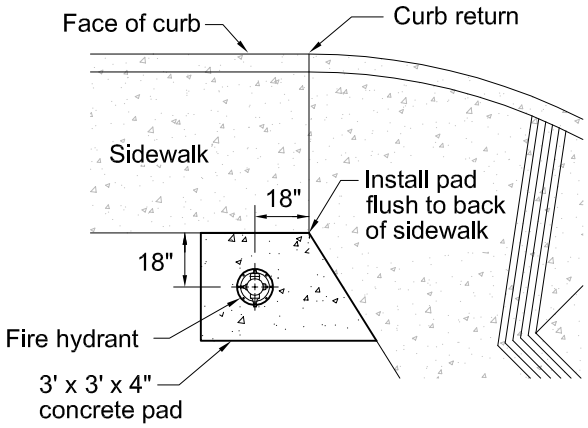

**PARK STRIP-
SIDEWALK ATTACHED TO CURB**

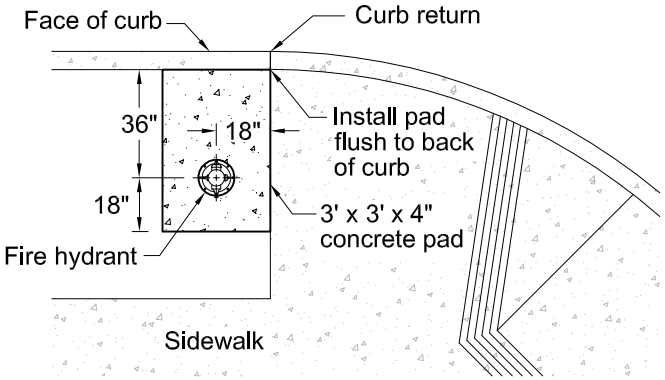

SIDEWALK NOT ATTACHED TO CURB

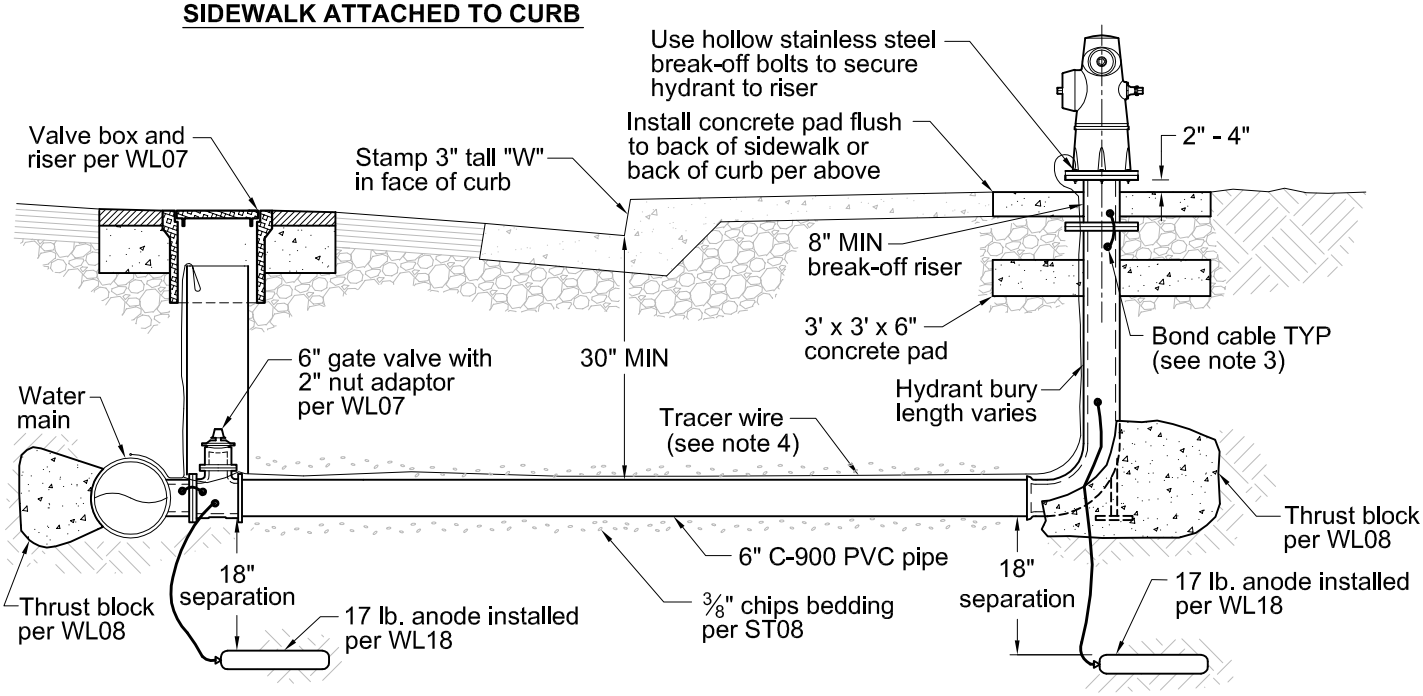

PROFILE

NOTES:

1. Hydrants shall not be closer than 5' to a driveway, parking lot space, etc.
2. Where a bollard, retaining wall, fence, etc. is located near a hydrant, maintain 3' clearance between hydrant and obstruction.
3. All metallic fittings and sections of pipe shall be bonded together with an 8 gauge solid copper bond cable (black HMWPE insulation), welded per WL19 to ensure continuity.
4. Copper tracer wire (10 gauge insulated solid wire) shall be taped every 4' and run continuous from the water main, loop up into the valve box and terminate at fire hydrant. Connect wire to hydrant by flange bolt.
5. Fire hydrant shall be installed so that 4½" outlet is at right angle to the street.
6. Place blue-colored reflectorized raised pavement marker, at centerline of street, perpendicular to hydrant. When hydrant is located on a corner, reflectorized markers shall be placed at centerline of both streets, pendicular to hydrant.

APPROVED MATERIALS (see complete list)**:**

1. Concrete pads shall be Class B (5 sack)
2. Hydrants:
   a. Residental: Clow 960 or Jones J-4060
   b. Non-Residential: Clow 865 or Jones J-4065
3. Fire Hydrant Color:
   Benjamin & Moore safety orange (cm22.65)

CITY OF HEALDSBURG CALIFORNIA SINCE 1867	FIRE HYDRANT			STANDARD DETAIL WL11
	SCALE: NONE	APPROVED: M.T. Kerr	DATE: 8/2008	

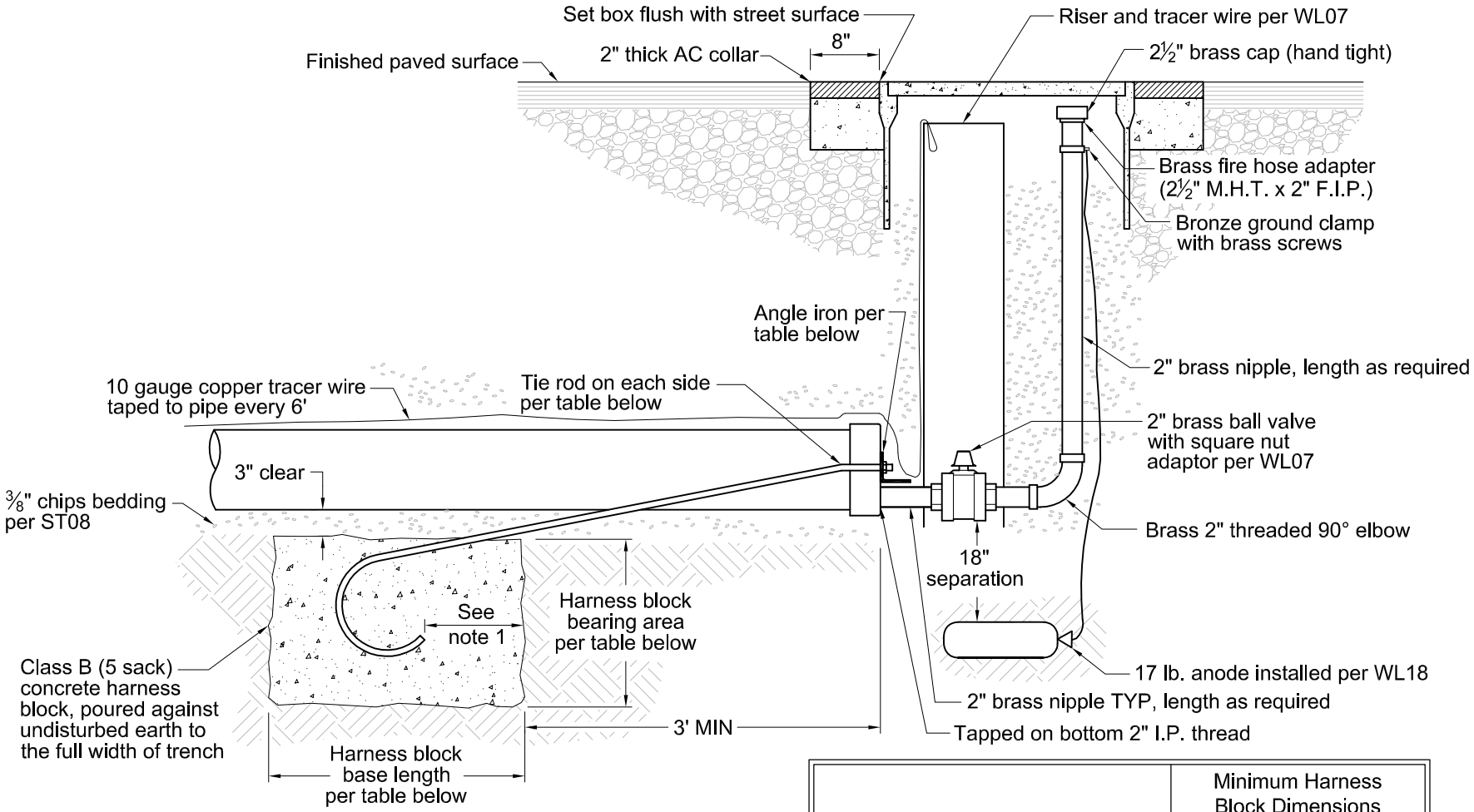

			Minimum Harness Block Dimensions	
Pipe Diameter	Tie Rods	Angle Iron	Base Length	*Bearing Area
4"	½"	2½" x 2" x ¼"	2'	2 sq-ft
6"	⅝"	3" x 3" x ¼"	2'	4 sq-ft
8"	¾"	3" x 3" x ¼"	3'	7 sq-ft
10"	1"	4" x 3" x 5/16"	3'	11 sq-ft
12"	1⅛"	4" x 3" x ½"	3'	15 sq-ft
Pipe over 12" diameter - sizes specified by City Engineer				

*Bearing area is the height multiplied by the width of the face of the concrete harness block.

NOTES:

1. Tie rods shall have 6" MIN of concrete cover on all sides.
2. All exposed threads shall be painted with an approved bituminous coating after nuts are tightened.

APPROVED MATERIALS (see complete City Approved Materials List):

1. Box: Christy B1324 box with 61JH lid with "BLOW OFF" welded on face

CITY OF HEALDSBURG
CALIFORNIA
SINCE 1867

SCALE: NONE

APPROVED:

DATE: 8/2008

BLOW OFF

WL12

STANDARD DETAIL

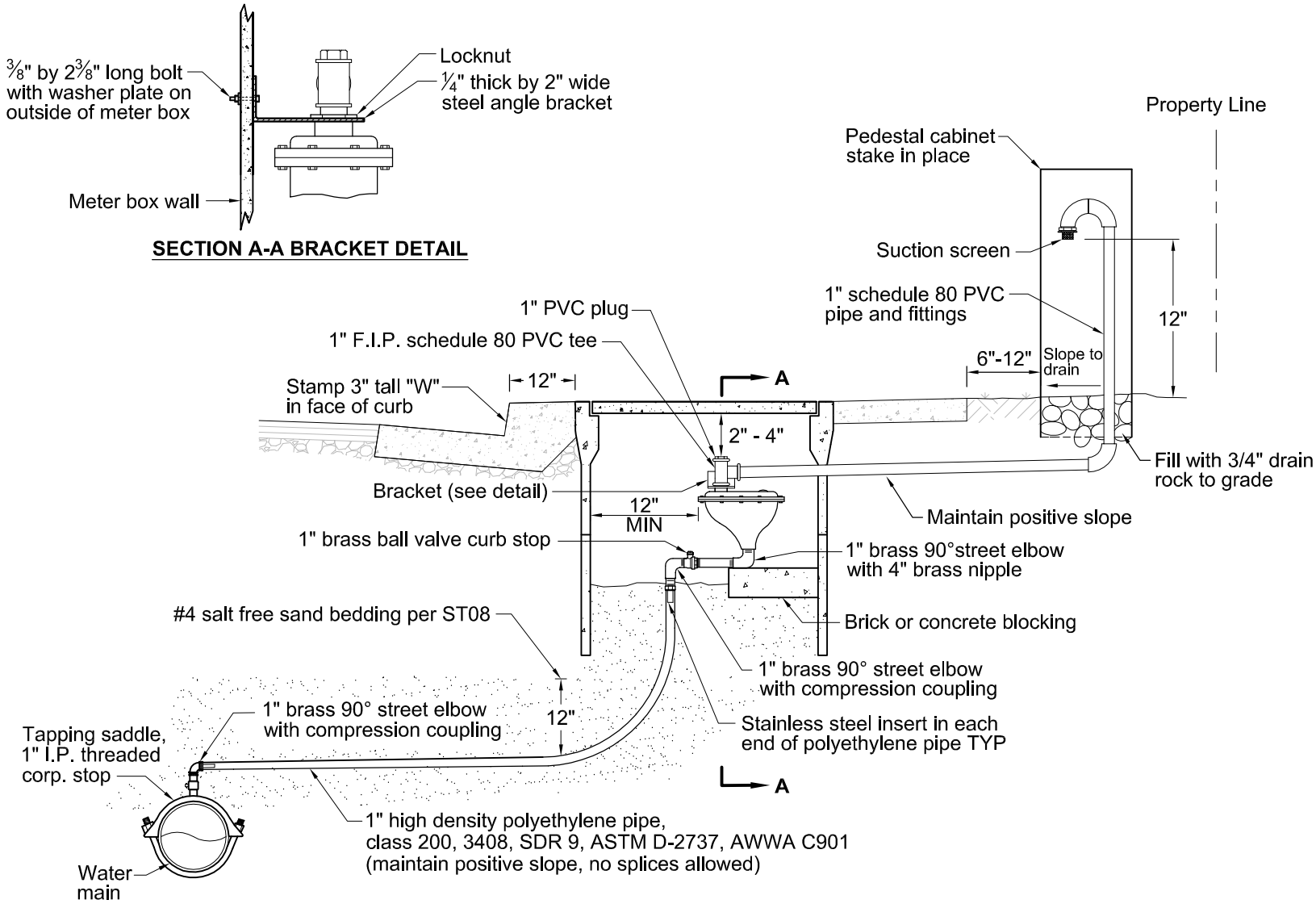

APPROVED MATERIALS (see complete City Approved Materials List):

1. Air Release Valve: APCO model 143C or Crispen model UL10
2. Box Enclosure:
   a. Christy B36 with B36D lid marked "WATER"
   b. Box Extension - B36x12 extension
3. Pedestal Cabinet: Marconi TV80SB
4. Suction Screen: Flow Ezy Filters Inc.

CITY OF HEALDSBURG
CALIFORNIA
SINCE 1867

SCALE: NONE

APPROVED:

DATE: 8/2008

AIR RELEASE VALVE

WL13

STANDARD DETAIL

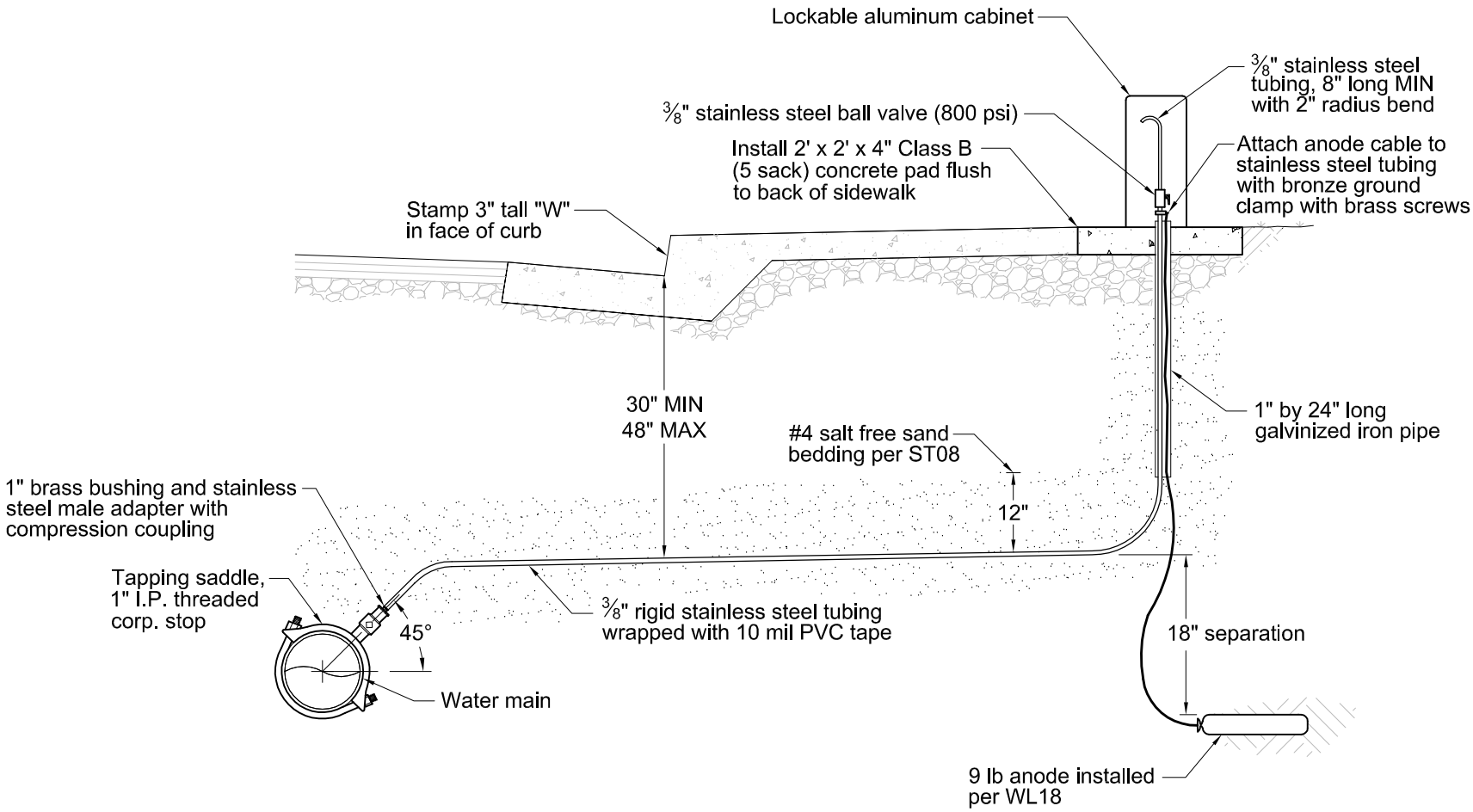

NOTES:

1. If more than one length of 3/8" stainless steel tubing is required, stainless steel compression couplings shall be used.

APPROVED MATERIALS (see complete City Approved Materials List):

1. Sample Station Cabinet: Kupferle model 88 (cabinet only)

CITY OF HEALDSBURG
CALIFORNIA
SINCE 1867

SCALE: NONE

APPROVED:

DATE: 8/2008

WATER SAMPLE STATION

WL14

STANDARD DETAIL

STANDARD DISCONTINUED

CITY OF HEALDSBURG CALIFORNIA SINCE 1867				STANDARD DETAIL
	SCALE: NONE	APPROVED: M.T. Kerr	DATE: 8/2008	WL15

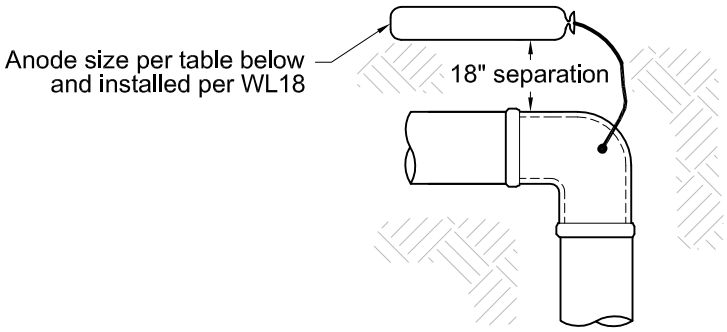

Example: 1-2 FITTINGS

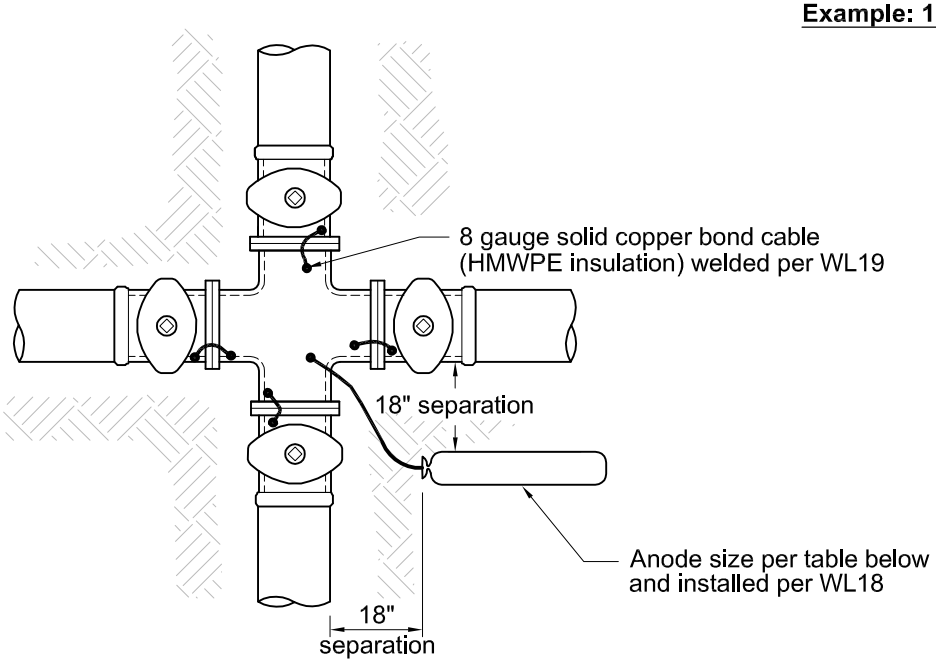

Example: 3-5 FITTINGS

NOTES:

1. Size of anode based on the number of metallic fittings and largest diameter pipe in the cluster (see table). For example a 6" main tees into a 12" main, use 12" pipe diameter to determine size of anode to be installed.

APPROVED MATERIALS (see complete City Approved Materials List):

1. Anode (high potential magnesium, bagged) for cathodic protection:

Pipe Diameter (see note 1)	Size of Anode	
	1 to 2 Fittings	3 to 5 Fittings
4"	9 lbs.	32 lbs.
6"	9 lbs.	32 lbs.
8"	17 lbs.	32 lbs.
12"	17 lbs.	60 lbs.
16"	32 lbs.	60 lbs.

CITY OF HEALDSBURG
CALIFORNIA SINCE 1867

CATHODIC PROTECTION

Metallic Fittings

SCALE:	APPROVED:	DATE:
NONE	M.T. Kerr	8/2008

STANDARD DETAIL

WL16

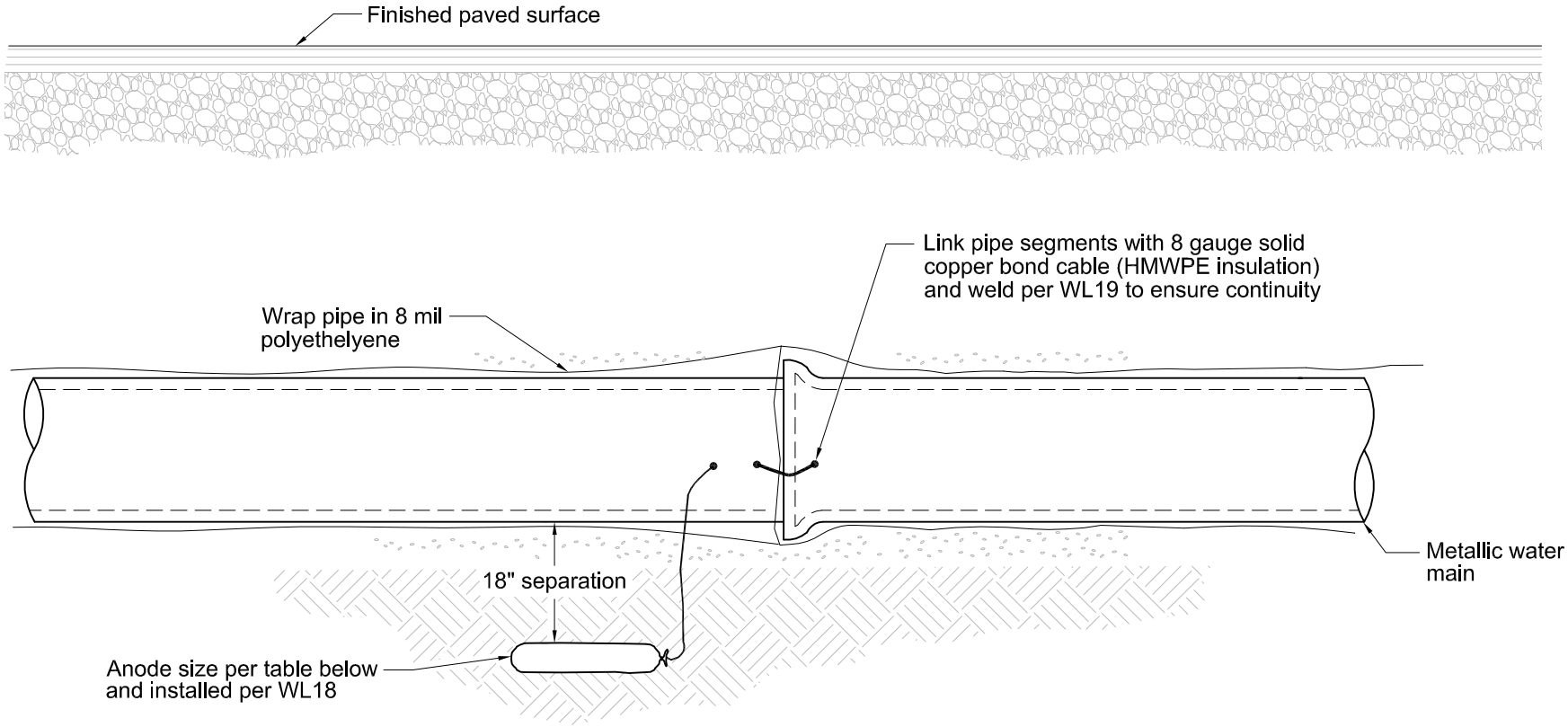

APPROVED MATERIALS (see complete City Approved Materials List):

1. Anode (high potential magnesium, bagged) for cathodic protection:

Pipe Diameter	MAX spacing of anodes	Size of Anode
4"	200'	32 lbs.
6"	200'	32 lbs.
8"	200'	60 lbs.
12"	100'	32 lbs.
16"	100'	60 lbs.

CITY OF HEALDSBURG
CALIFORNIA
SINCE 1867

CATHODIC PROTECTION

Metallic Mains

SCALE: NONE

APPROVED:

DATE: 8/2008

STANDARD DETAIL

WL17

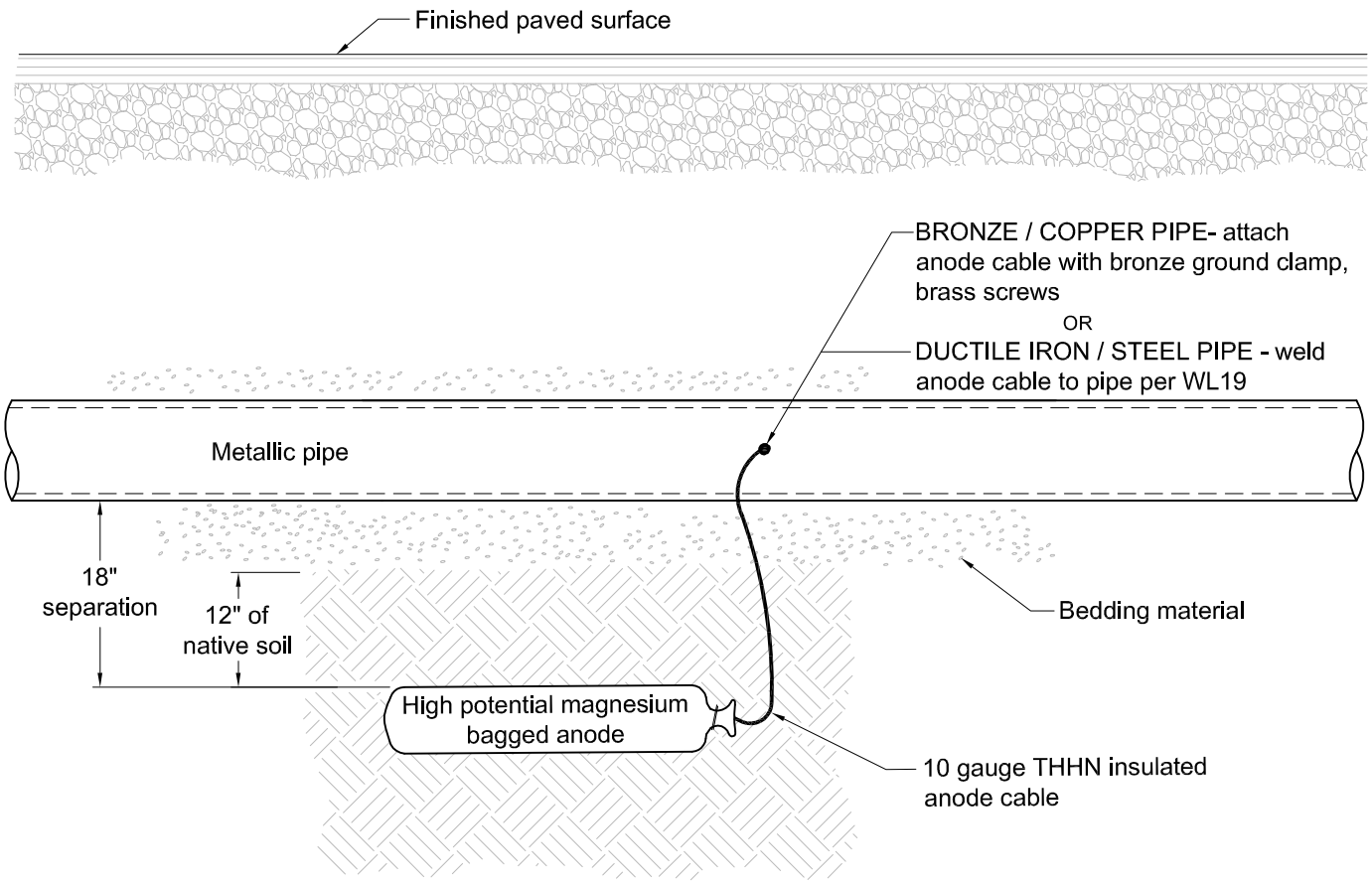

ANODE INSTALLATION PROCEDURE

1. Cloth bag on anode shall not be removed or damaged.
2. Soak anode in water until thoroughly saturated prior to burial.
3. Anode shall not be carried or lowered by the conductor cable.
4. Place anode cable under foot print of meter box where available.
5. Install anode in native ground. Fill hole around bagged anode and cover with a minimum of 12" of native material free of rocks and foreign matter.
6. Anodes shall be installed either vertically or horizontally. 18" of clearance shall be provided between anode and pipe, fittings, tubing, etc.
7. Test anode circuit for continuity after installation and prior to backfilling.

CITY OF HEALDSBURG CALIFORNIA SINCE 1867	CATHODIC PROTECTION Typical Anode Installation			STANDARD DETAIL WL18
	SCALE: NONE	APPROVED: M.T. Kim	DATE: 8/2008	

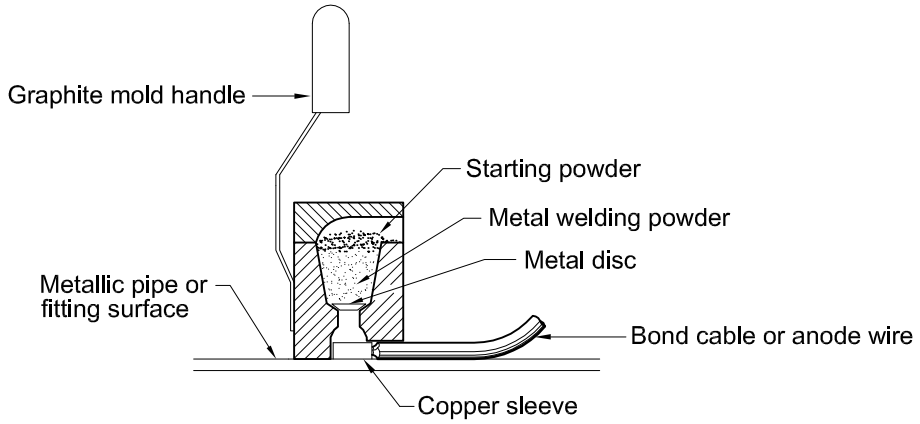

STEP 1. Grind protective coating off of pipe or fitting to expose clean metal surface (do not use resin impregnated grinding wheels).

STEP 2. Strip insulation from wire and attach copper sleeve (use appropriate sized sleeve for wire gauge).

STEP 3. Hold graphite mold firmly by handle with opening away from operator and ignite starting powder with flint gun.

STEP 4. After weld has cooled, remove all slag and test weld with sharp blow from 22 ounce hammer to assure sound bond. Defective welds shall be removed and replaced.

STEP 5. Cover weld and exposed portion of pipe or fitting surface with ¼" of insulating material per detail below.

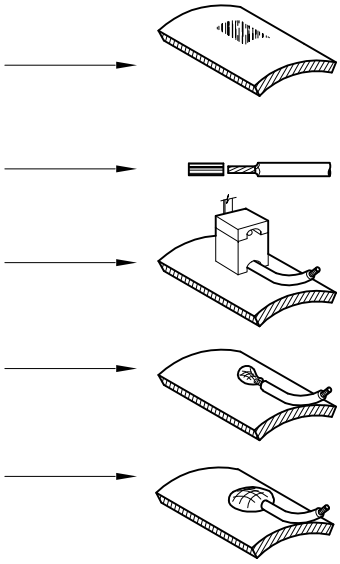

EXOTHERMIC WELD PROCEDURE

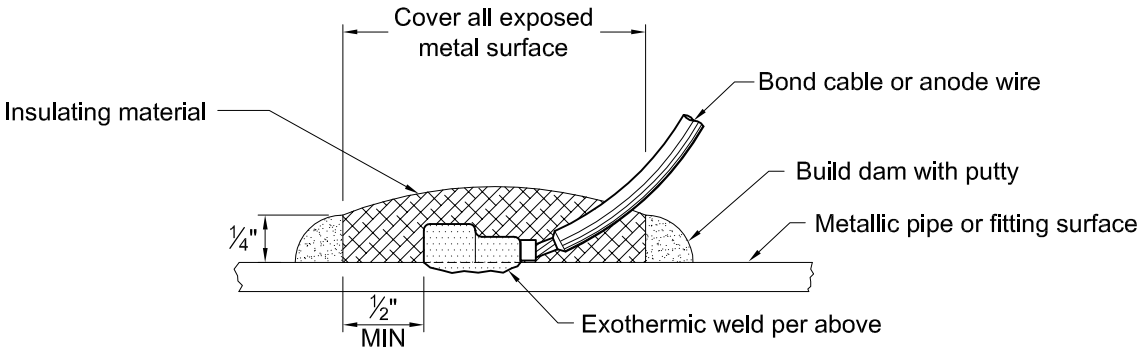

INSULATING MATERIAL APPLICATION

NOTES:

1. Procedure outlined above is to be used as a general guide only, consult the manufacturer's literature for specific installation instructions.

CITY OF HEALDSBURG CALIFORNIA SINCE 1867	CATHODIC PROTECTION Cable to Pipe Connection		STANDARD DETAIL WL19
	SCALE: NONE	APPROVED: M.T. Kim	DATE: 8/2008

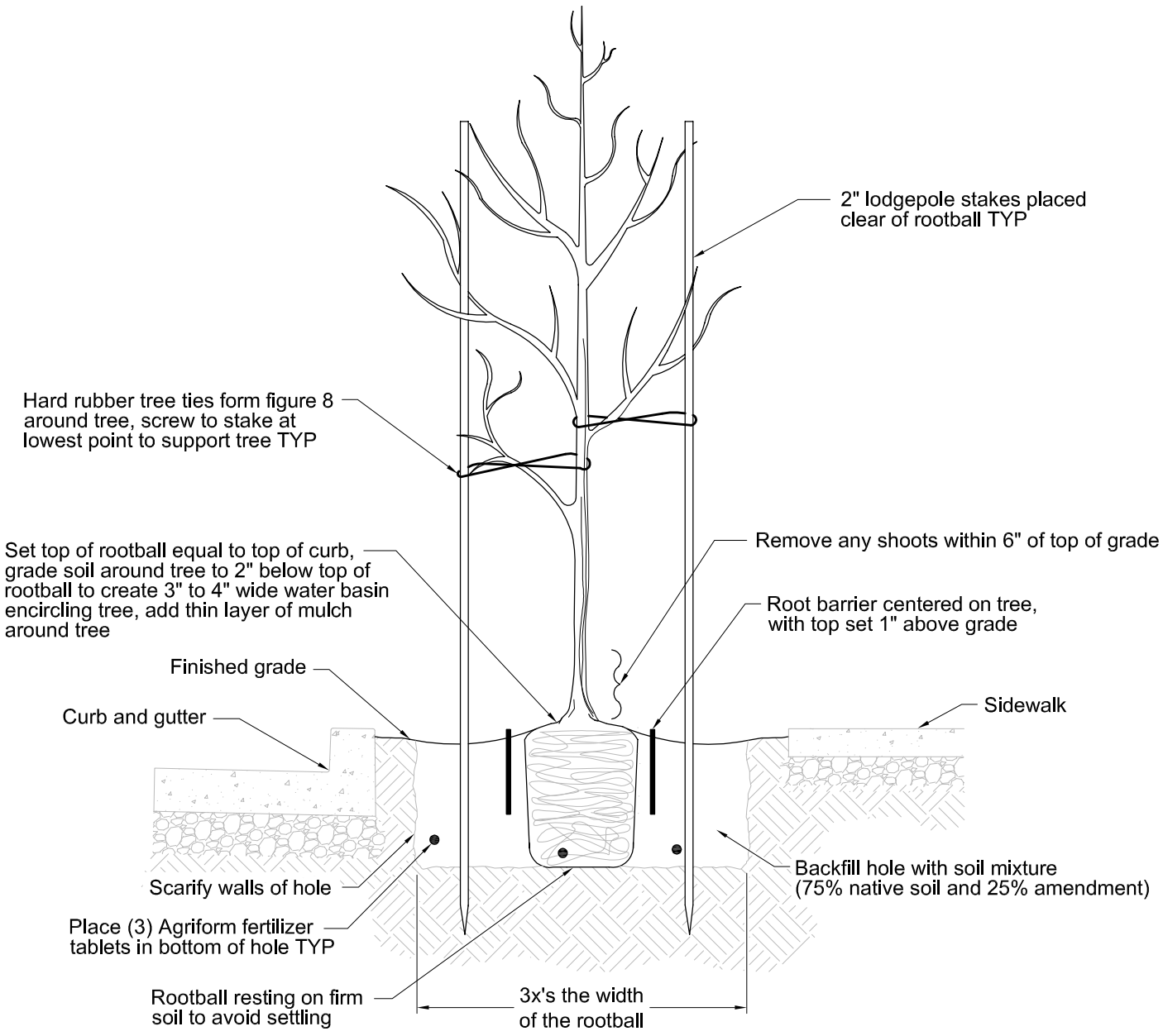

NOTES:

1. 15 gallon MIN tree shall be used and nursery stake removed prior to planting.

APPROVED MATERIALS (see complete list)**:**

1. Root barrier: Century Products 24" diameter by 12" or approved equal

CITY OF HEALDSBURG CALIFORNIA SINCE 1867	STREET TREE Planting		STANDARD DETAIL MS01
SCALE: NONE	APPROVED: M.T. Kerr	DATE: 8/2008	

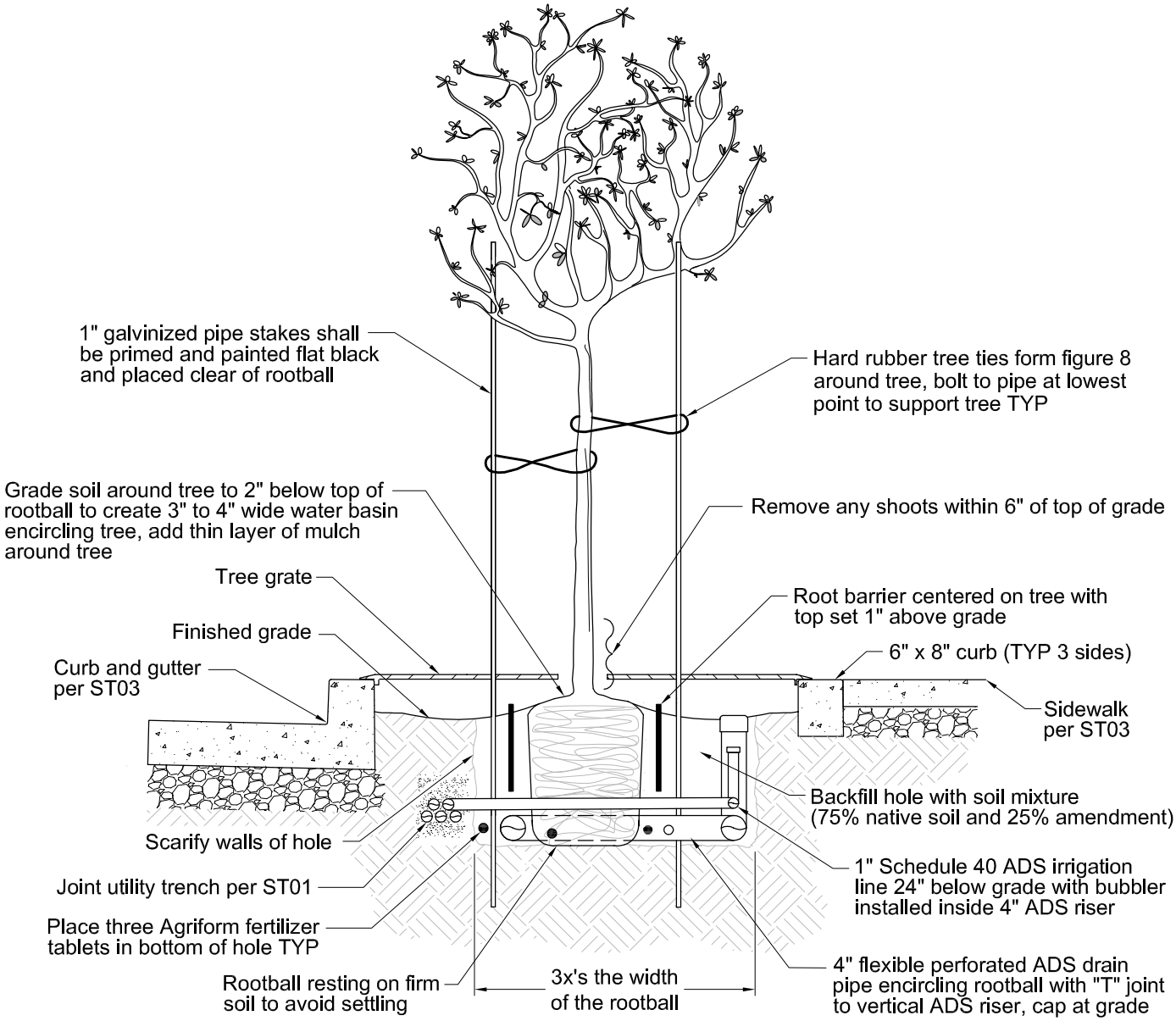

NOTES:

1. Top of concrete shall conform to top of existing curb within a single plane.
2. Tree wells shall be perpendicular to back of curb.
3. 15 gallon MIN tree shall be used and nursery stake removed prior to planting.

APPROVED MATERIALS (see complete list)**:**

1. Root barrier: Century Products 24" diameter by 12" or approved equal
2. Bubbler: Toro Bubbler 570-FB-25-PC
3. Tree grate:
   a. 48" x 48" tree wells - Neenah R9002
   b. 64" x 32" tree wells - Neenah R9105

CITY OF HEALDSBURG CALIFORNIA SINCE 1867	STREET TREE Streetscape		STANDARD DETAIL MS02
	SCALE: NONE	APPROVED: M.T. Kim	DATE: 8/2008